REDFOOT

LEVELLING

REDFOOT ELITE AUTO LEVELLING SYSTEM

Installation Manual

Effective January 2021

Before starting the installation, check the content of all boxes received against the picking slip which is attached to the outer of the main carton. Please call Redfoot Levelling immediately if there is a discrepancy!

WARNING!

This is a 12VDC System **DO NOT** connect to your 24Volt House Battery

Warning:

REDFOOT Levelling does not permit use of our levelling system to be used as a 'Tyre Jack" solution. Do not use the levelling system as a vehicle jack when changing tyres. Use the proper vehicle jack supplied with the vehicle in accordance with the manufacturer's instructions. Jack Stands shall be in use as the primary support at all times when wheels are off the ground for long durations.

Modification of any factory-supplied item may result in the denial of all warranty claims. Call Redfoot Levelling Solutions Technical Support prior to any modifications. Redfoot Levelling Solutions offers full installation support for authorised approved Installers only. End user installers must read and accept our Warranty and Terms and Conditions on the Invoice issued with this purchase.

Danger:

With any hydraulic application, holding position on a cylinder must be done with safety in mind. Failure in the system may cause the jack(s) to retract or extend suddenly. When working under or near the vehicle, always use jack stands of appropriate rating to support the weight of the vehicle.

Contents

Table of Contents

Preparation for Installation....4
Tools Required for Installation....4
Additional Items Required for Installation....4
Installing the Cylinders....5
Installing the Pump....6
Installing the Fittings....6
Installing the Hoses....7
Installation of Hoses to the Manifold....7
EQ Smart-Level Control Panel Programing....10
Setting the Null....11
Chassis Interface Connections....12
Keypad Indicator LED's....16
Manual Operation....17
Retracting the Jacks....18
Auto-Level Operation – Keypad 3103....18
Manual Operation- Keypad # 3103....22
Purging the Cylinders of Air....24
Manual Override....24
Product Warranty Guide....31
Replacement Parts:....31

Preparation for Installation

Before starting the installation, check the contents of all boxes received against the delivery docket. Please call us immediately if there is any discrepancy.

Tools Required for Installation

- Ratchet, sockets, and spanner set
- Wire cutters / crimpers
- Electric drill and bits
- Screw gun bits
- Welding equipment (if welding leg or bracket in place)

Additional Items Required for Installation

- # 4 AWG power wire (to connect battery +12V positive to the pump) *
- # 4 AWG ground wire (to connect battery -12V ground to pump) *
- # 4 AWG ring terminals
- Loom clips (to secure harnesses and hydraulic hoses to the coach)
- Self-tapping screws or pop rivets
- Cable Ties
- 8 -9 litres Dexron III Automatic Transmission Fluid (Common ATF)
- Thread locking fluid to secure foot bolts to cylinders.

* Note: These items must be # 2 AWG if cable run is greater than 4 meters * It is most important that these cables meet 5.2 mm or cross-section of 21 mm 2 (Australian Standard).

Installing the Cylinders

Determine where the cylinders will be mounted. The cylinders must be mounted to the chassis frame, as close as possible to the front and rear axles. We advise that to optimize departure clearance, mount the cylinders within 1 meter of each axle.

Secure the cylinders brackets in place according to the bracket mounting drawings. Bolt the cylinders to the bracket using the supplied nuts and washers. The cylinders must be installed with a minimum of 200mm of ground clearance. See Installation chart below. In any case, the bottom of the footpad should be no lower than any other item mounted on the vehicle.

On some extremely low vehicles there is provisions to mount lower than the 200mm as recommended, as long the foot does not impede the departure clearance angle.

Pay attention to the angle of departure for the chassis when mounting the rear cylinders – and the angle of approach when mounting the front cylinders.

Reference Chart for Installing Jacks:

The foot/pad must be mounted with-in the range suggested (see chart below) for proper operation of the system. Retract the cylinders fully (cylinder up).

Ground clearance is determined by measuring from the bottom of the cylinders foot to the ground (cylinders retracted fully) with 200mm minimum of ground clearance

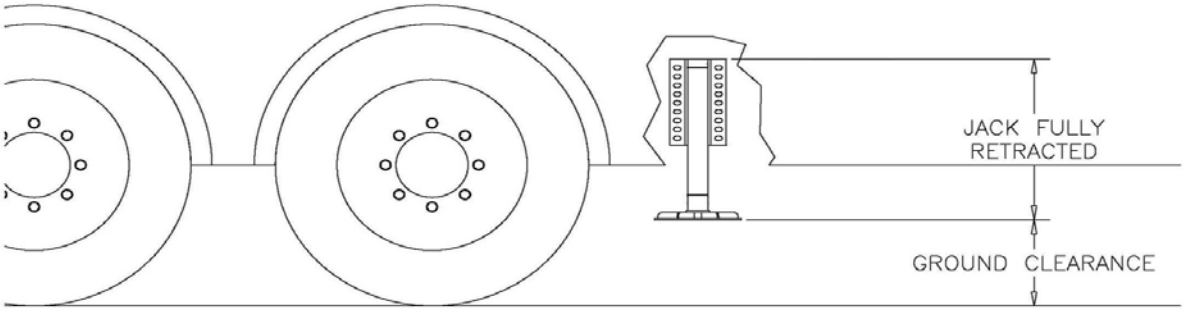

When in doubt call Redfoot Levelling (07) 3286 1199.

Installing the Pump

The pump must be mounted in a location that is reasonable to route all the hydraulic hoses to the manifold. It must be accessible for filling the reservoir and monitoring the fill level. Take note if the unit is equipped with the manual override option.

The pump handle, cartridge valves and directional valves must be accessible to manually override the system. If the pump is equipped with the manual override screw on the end of the motor, then be sure to allow access to that end of the pump. See pump end Page 8. In most applications, a side storage compartment will provide the ideal location. An additional mounting box or tray may be used on other style coaches.

Installing the Fittings

Install the hydraulic adaptor fittings in the top and bottom of each jack and install the fittings into the manifold. The straight thread O-ring side always goes to the cylinder or manifold. The tapered side will get the hose attached to it.

When installing straight fittings into the leg or manifold, tighten to 15 lbs-ft. When using 900 fittings, turn until finger tight, position correctly, then tighten the jam nut to 15 lbs-ft. See Page 8.

Installing the Hoses

Install the hydraulic hoses according to the diagram on page 7. Route the hoses clear of all hot exhaust components and pinch points in the suspension/chassis system. Attach the hoses to the manifold and jack fittings.

Tighten to 15 lbs-ft. Secure the hydraulic hoses with wire ties or loom clamps to the chassis. Care should be taken to not kink or twist hoses. The minimum bend radius is 6 inches.

Secure the hydraulic hoses with wire ties or loom clamps to the chassis. Incorrect plumbing will cause operating problems at start-up.

Installation of Hoses to the Manifold

Jack Leg	**Manifold Connection**
Left Front-Top	T-1 Brown Solid
Left Front-Bottom	B-1 Brown Stripe
Right Front-Top	T-2 White Solid
Right Front Bottom	B-2 White Stripe
Left Rear-Top	T3- Orange Solid
Left Rear-Bottom	B3- Orange Stripe
Right Rear-Top	T-4 Yellow Solid
Right Rear-Bottom	B-4 Yellow Stripe

Left side = Passenger Side of Vehicle
Right side = Drivers Side of Vehicle

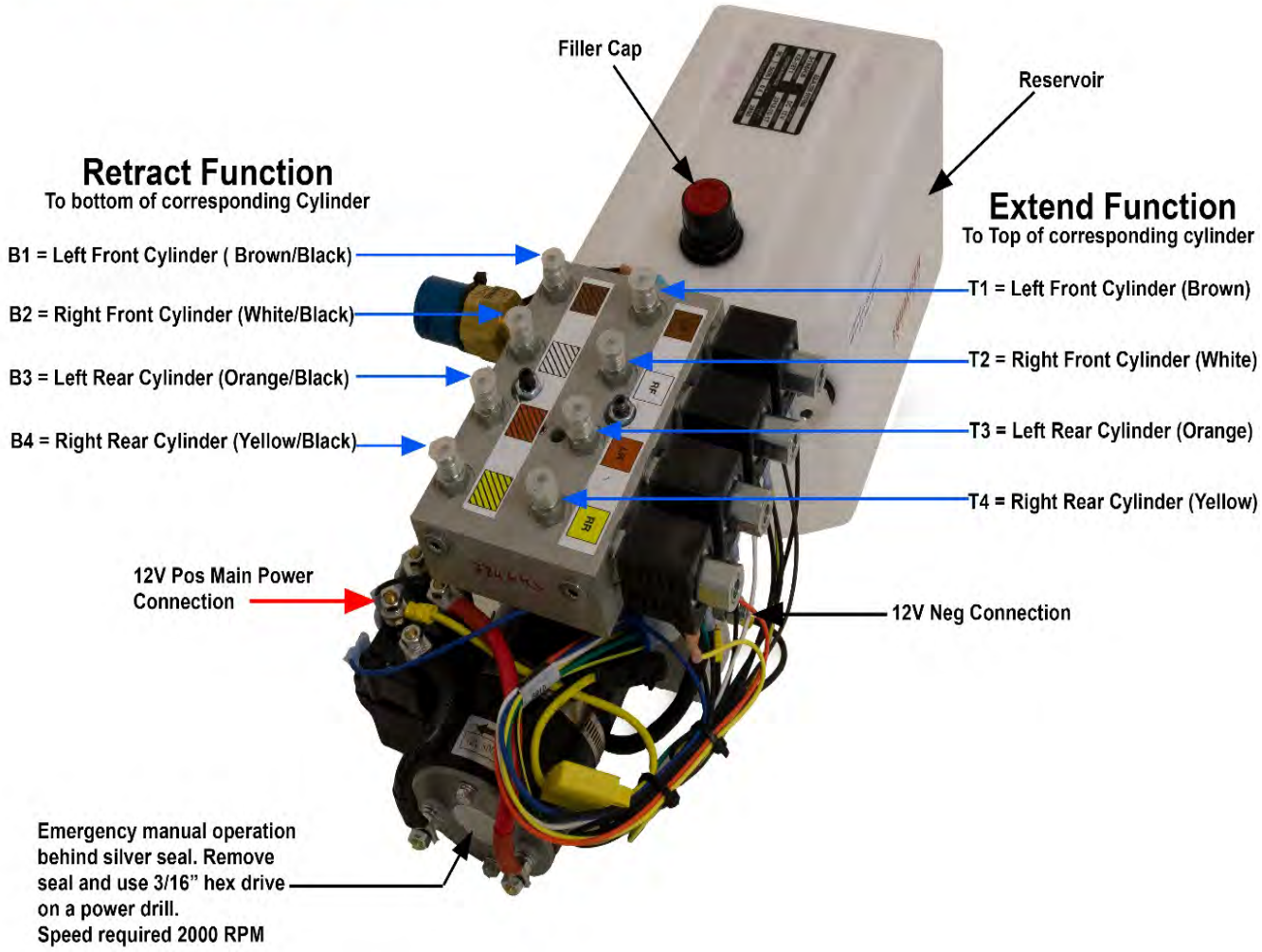

DO NOT over tighten the female fitting on the hose as this can cause damage to the fitting.

EQ Smart-Level Control Panel Programing

After the system is fully installed the control panel must be programed for operation. Failure to do this will result in a failed or improper Auto-Level. There are basically two program settings the orientation setting and the null setting that must be done in the following order.

Orientation Setting:
This process cannot be completed until after the system has been connected to power and the control panel has been mounted and all electrical harness connections have been completed. This process teaches the control panel where the front of the coach is and how the control panel is mounted (vertical or horizontal). If this process in not performed correctly the processor will not know where the front of the coach is. It is possible that without doing this process it may work on a level floor/shop environment however when at sites where the system needs to operate specific legs for leveling it very likely will operate the improper legs. Once this process is properly completed the setting will be “retained” in the control panel and should not ever need to be done again.

With the control panel off press and hold the all retract button then while holding it press the power button, then release both buttons. The power light will start blinking and you will hear a rhythm beeping, also the 4 jacks down indicator lights will be on. Next the orientation is selected by pressing one of the manual control arrows. The exact specific one is determined by how the panel is mounted (see examples below). You will select up arrow if the panel is mounted vertically and down arrow if it is mounted horizontal. The specific one is the one that most relates to the front of the coach.

Examples:
If the panel is mounted vertically in the dash so that you are looking at it when sitting in the driver’s seat. You would push the up arrow for the front jacks.
If the panel is mounted horizontal and in a side surface next to the drivers left arm, then you would push the down arrow for the right-side jacks.
If the panel is mounted vertically in a cabinet wall so that when you are looking at it, you are facing the rear of the coach then you would press the up arrow for the rear jacks.

Note: if you are not clear on this process check our web site for video and/or call Redfoot Levelling for assistance.

Secure the harness with wire ties or loom clamps to the chassis.

Setting the Null:

Null is the term used to indicate the levelness of the coach. A null setting was done at the factory so that the system will try to level, however most likely it will need to be set after the installation of the control panel as the leveling sensor is in the panel. With the coach sitting somewhat level on the shop floor and with the panel power off, depress and hold the Auto-Level button and then press and release the power button Do not release the Auto-Level button and listen for a series of beeps.

After the keypad has beeped 5 to 6 times, release the Auto-Level button (the keypad will continue to beep as long as the Auto-Level button is held). The new null has been set and the panel will maintain this setting. This process may need to be completed later following an Auto-Level process if the coach is not level.

Chassis Interface Connections

****Required****

Keypad Ignition Disable Circuit: Note the “break-outs" near the end of the keypad harness. The Pink wire must receive a +12 VDC Input when the ignition key is in the “on” position. Connect this wire to the ignition positive. This will make the wire "hot” and will inhibit cylinder extension when the vehicle ignition key is in the on (engine run) position. This also provides for a “cylinders down” warning in the event of a jack drifting from the stowed position during travel. This connection is required. **Failure to make this connection may create an unsafe condition and may void the warranty.**

****Required****

(Park Brake Ground): The **Black w/ Yellow** wire must receive a **Ground Input.** This **Black w/ Yellow** wire is designed to connect to the park brake switch so that it is connected to ground when the brake is applied and disconnected from ground when the brake is released. Contact your chassis manufacturer to verify park brake wire connection and location. If a park-brake signal is not available; this **Black / Yellow** wire must be grounded to a permanent chassis ground. The connection to a park brake switch is optional. If this input is not connected to the park brake switch or to ground, AUTO-LEVEL will be continuously denied. Also, the engage park brake light will be on if the panel is powered up or the key is in the on (engine run position).

***Note: If Black/Yellow is connected to a park brake switch (as in above step) and the pink is connected (as in above step), an automatic “all retract” will be initiated if the key is tuned on (engine run position) and the park brake is released.**

Suspension deflate/Inflate: If chassis is equipped - There are two additional wires that break out from the harness near the keypad (if supplied). The grey wire provides a 12 VDC positive output for 2 minutes when the auto level button is pressed. This may be used to deflate the chassis air suspension. The Purple wire will provide a 2 minute 12 VDC positive output when the all-retract is pressed. This may be used to inflate the chassis air suspension. The Chassis must be equipped with an electric dump/inflate system for this interface. Check with the chassis manufacturer for the availability of this and the chassis side of this interface. If the chassis is not equipped or it is not to have this option, tape the 2 wires back to prevent shorting (do not use).

Pump harness connections: Attach the supplied wire harness between the pump and the location of the controller. This harness will connect between the pump and the mating connector on the controller. Note the harness breakouts for the main harness at the hydraulic pump. There are (2) ea. Connectors for the jacks. There may be other connectors if the pump unit will also be running slide-outs. If slides are involved, contact Redfoot Levelling for direction on this. Plug each connector from the harness into the corresponding connector on the pump. Secure the harness with wire ties or

loom clamps to the chassis. You should have no disconnected plugs (unless the vehicle is not equipped with chassis air ride). All the connections at the pump should be completed- **Except the power and ground connections at the pump, which are completed next.**

Power Connections:

Attach a #4-gauge wire (#2 gauge if the run is over 12 feet - 3.6 meters) between the +12V terminal on the battery and the battery post at the motor solenoid on the pump. The solenoid post will generally have a yellow fused wire attached to it that supplies power to the controller. This battery connection may be fused at the source with a 120-amp circuit breaker. This +12V supply must be a dedicated and isolated circuit (not shared with any other device) and must be constant, non-switched +12V.

Attach a #4-gauge wire (#2 gauge if the run is over 12 feet - 3.6 meters) between the -12V terminal on the battery and the ground stud on the pump. This ground stud is located on the port plate on the pump. This is the preferred method of grounding. If grounding the pump to the chassis, the connection must be sound, free of paint and not susceptible to corrosion. The **battery connection** to the frame must also be of #4 gauge or larger cable. It is not acceptable to allow the pump mounting bolts to be the sole grounding connection.

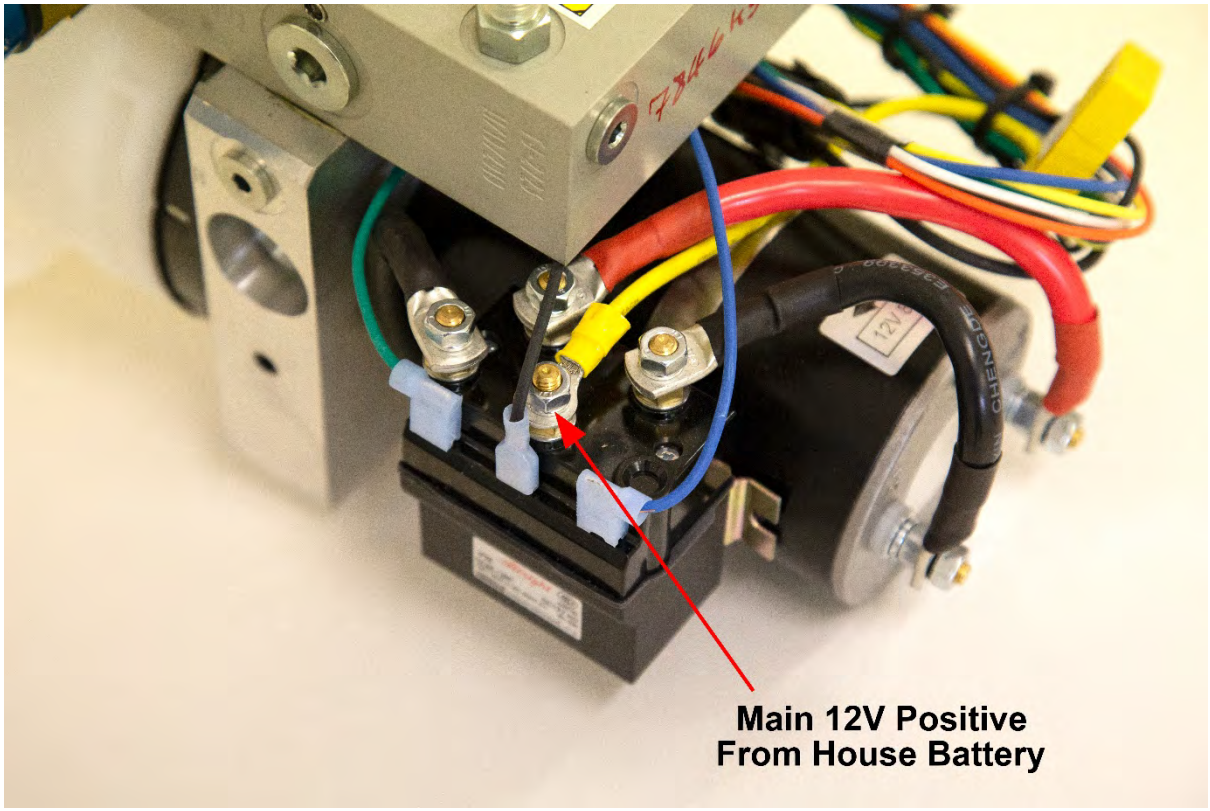
Main 12V Positive
From House Battery

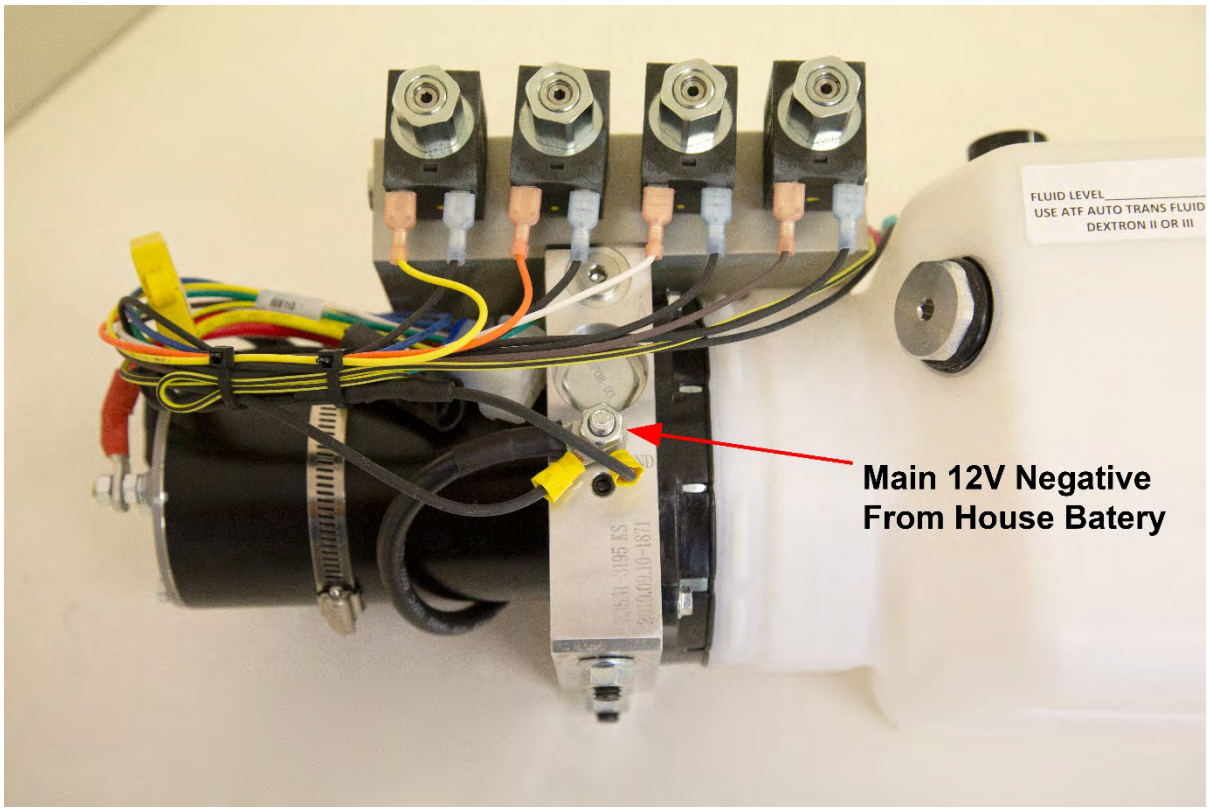
FLUID LEVEL
USE ATF AUTO TRANS FLUID
DEXTRON II OR III
Main 12V Negative
From House Batery

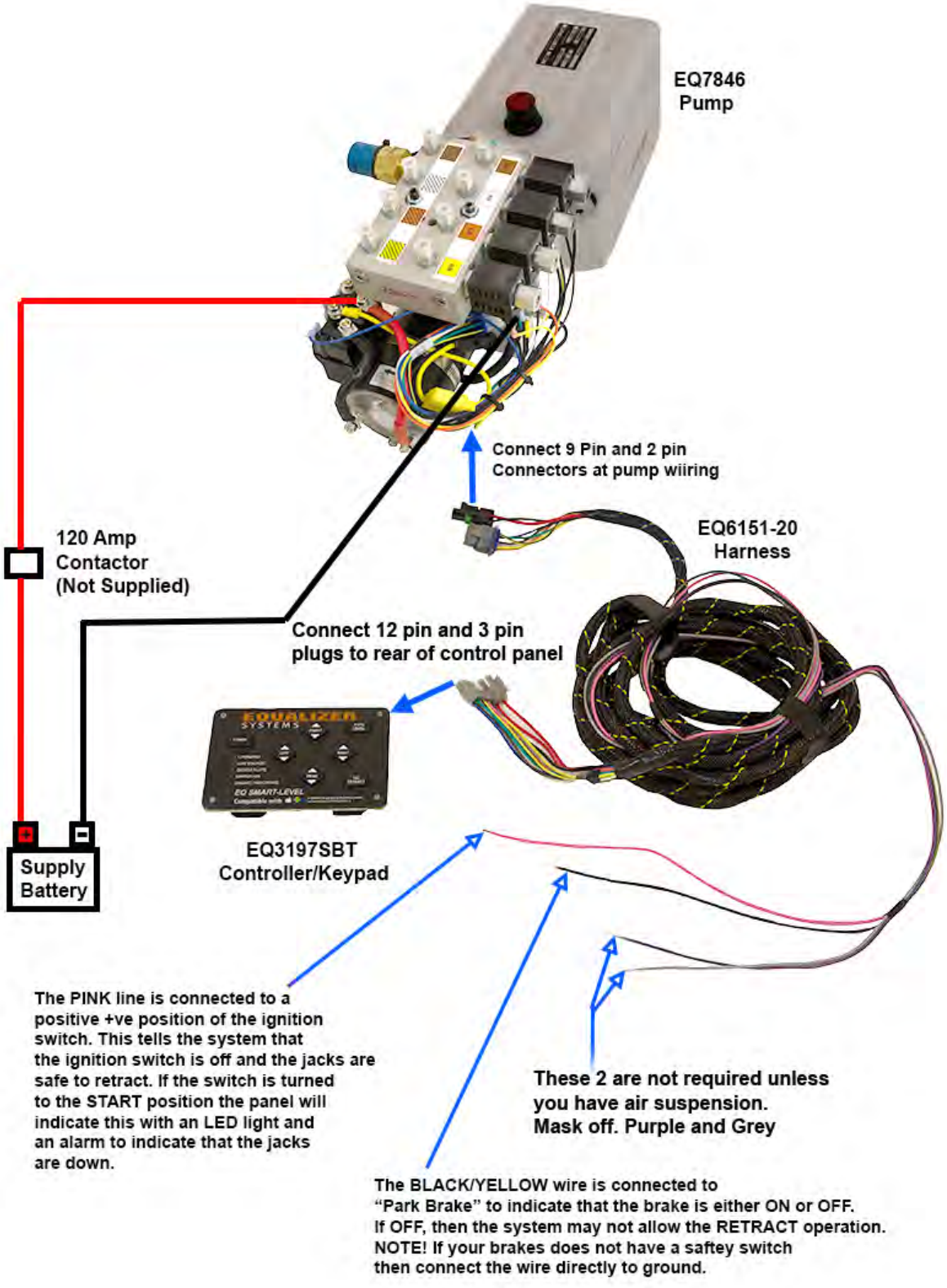
EQ7846
Pump
Connect 9 Pin and 2 pin
Connectors at pump wiring
EQ6151-20
Harness
120 Amp
Contactor
(Not Supplied)
Connect 12 pin and 3 pin
plugs to rear of control panel
EQUALIZER
SYSTEMS
Supply
Battery
EQ3197SBT
Controller/Keypad
The PINK line is connected to a
positive +ve position of the ignition
switch. This tells the system that
the ignition switch is off and the jacks are
safe to retract. If the switch is turned
to the START position the panel will
indicate this with an LED light and
an alarm to indicate that the jacks
are down.
These 2 are not required unless
you have air suspension.
Mask off. Purple and Grey
The BLACK/YELLOW wire is connected to
"Park Brake" to indicate that the brake is either ON or OFF.
If OFF, then the system may not allow the RETRACT operation.
NOTE! If your brakes does not have a saftey switch
then connect the wire directly to ground.

Keypad Indicator LED's

During typical operation, the LED's on the bottom left hand corner of the keypad should NOT be illuminated. The only LED that should light is the OPERATING LED, which should flash during operation.

POWER LED	Red when power is ON
	OFF when power is OFF
	FLASH every 1 sec. in sleep mode
JACK LED	Red when jack(s) are deployed
	OFF when jack(s) are stowed
OPERATING LED	ON Red w/Auto-Level or All Retract
	OFF when keypad is idle or sleeping
LOW VOLTAGE LED	ON Red when voltage is below 10.5 VDC
	OFF when voltage is above 10.5VDC
ENGAGE PARK BRAKE LED	ON Red when park brake is not set
	OFF when park brake is set
IGNITION ON LED	ON Red when ignition is in the ON position
	OFF when ignition is off
EXCESS SLOPE LED	ON Red following an Auto-Level attempt, if system cannot overcome slope
	OFF when slope is not excessive

- If the LOW VOLTAGE, ENGAGE PARK BRAKE, IGNITION ON or EXCESS SLOPE LED's illuminate, you have an error condition that must be corrected prior to operating the jacks.

- It is imperative that the ignition on light operates as described. If not, then a possible unsafe condition may exist.

Manual Operation

Power On: Push and release the Power Keypad button to engage power. All lights will come on then most will go out. The LED light next to the Power button should be lit RED when power is on. If you have installed the ignition disable circuit (step 8 Keypad Ignition Disable Circuit- Page 9), you will need to have the ignition key in the “off” position to extend the jacks.

If you attempt to extend individual jacks by pressing the Down Keypad buttons or all the jacks with the Auto-Level button, you will hear a “deny” tone from the keypad if the ignition key is in the improper position.

Planting the Jacks:

Using the Down Keypad button, extend each jack until they contact the ground (this is referred to as “planting” the jacks). As you extend each jack, an LED light on the Keypad will indicate the jack is out of the “stowed” position. Jacks may be operated individually or in pairs. **Do not manually overextend individual jacks. This may cause unwanted stress on the coach or the jacks.**

Levelling the Motorhome/ bus/ specialty vehicle:

Use a bubble level on a flat surface in the center (or close) to the coach. Level the vehicle by using the Down or Up Keypad buttons until the vehicle is level. Jacks may be operated individually or in pairs as long as they are operated in the same direction.

Do not attempt to lift the vehicle’s tyres off the ground. The Keypad may be left on once level has been achieved. The Keypad will enter “sleep mode” after five minutes of inactivity.

Note:

There are specific instances when manual extension of one or more jacks is inhibited (deny tone when Down is depressed). This situation is caused by the ‘anti-twist’ protocol in the software installed in the Controller. Simply stated, the ‘anti-twist’ protocol denies jack extension if the system senses that a specific corner of the coach is approximately 3 degrees higher than the rest. You will be able to extend the other jacks to overcome the slope. *If the system incorrectly senses excessive slope, this can be overcome by re-setting the null. This will allow manual extension of all jacks.*

Retracting the Jacks

Use the All Retract button to retract the jacks prior to travel.

The Redfoot Auto Levelling System does provide the ability to retract the jacks using the UP buttons for each individual jack. However, these buttons are not intended to be used for retracting the jacks to their stowed position prior to travel.

The individual Up arrows are to be used only for retracting the jacks to help level the coach. The All Retract button must be pressed to ensure the system is ready/safe for travel. All jacks will automatically retract and return to stowed position when the ALL RETRACT button is pressed and released. The pump will run in retract for approximately 5 seconds after the last jack has been fully retracted- or until a time limit of 90 seconds has been reached.

It is always the responsibility of the motorhome operator to visually confirm that the jacks are fully retracted and safe for travel

Auto-Level Operation – Keypad 3103

Power On:

Push and release the Power button to engage power. The LED light next to the Power button should be RED when power is on. You will need to have the ignition key in the “off” position to extend the jacks. If you attempt to extend individual jacks or all jacks with the Auto-Level button, you will hear a deny tone from the keypad if the ignition key is in the improper position.

Auto-Level:

Press the Auto-Level button and release. The system will send out a continuous series of beeps and the “Operating” LED will flash RED to let you know Auto-Level is operation and will automatically level the coach. When completed, the Keypad will signal the successful completion with a dual-stage tone. The Keypad may be left on once level has been achieved. The Keypad will enter “sleep mode” after five minutes of inactivity.

Setting the Null:

Null is the term used to indicate the levelness of the coach. The null has been preset at the factory. If the coach is not level following an attempt to Auto-Level, you will need to level the coach and reset the null. To set the null, push and release the Power button on the Keypad to engage power. The LED light next to the Power button should be RED when the power is on. Level the coach by deploying jacks manually, or by simply parking the coach on a level site.

You do not need to have the jacks deployed to set the null. Use a bubble level on a flat surface in the center (or close) to the motorhome as a reference. Once the motorhome is level, turn the power off at the panel. Depress and hold the Auto-Level button and press and release the Power button and listen for a series of beep. After the Keypad has beeped 5 to 6 times, release the Auto-Level button (the Keypad will continue to beep if the Auto-Level button is held). The new null has been set and the panel will maintain this setting. Press and release the All Retract button to retract the jacks to the stowed position.

Helpful Hints

- If your motorhome is equipped with air suspension, it is recommended to start your motorhome and allow the chassis air to build before pressing All Retract. This will ensure adequate air supply to the chassis air valves.
- Do not allow excessive motion in the motorhome during the Auto-Level operation (do not move around in the motorhome). This could cause the system to level improperly.
- The Auto-Level is a microprocessor-controlled system. Proper and adequate battery voltage and permanent chassis ground are essential.
- Your system may be equipped with a manual override option. Refer to the procedure for proper operation of this option. It is usually better to review this procedure prior to its actual use, rather than having to learn a new procedure in difficult environments.
- If the system has not been used (with the jacks stowed) for over 24 hours, it is recommended that you engage the All Retract button prior to travel in order to re-pressurize the system.
- A lubricant, like T9 by Boeing Aircraft, may be used to clean and lubricate the cylinder shafts/rods. Contact our office on (07) 3286 1199 to order a pressurised can.

Power On: Press and release the POWER button to engage power. All LED's on the panel will come on then most will go out. The LED next to the POWER button should be RED when power is on. If an ignition and or park brake disable circuit is present you will need to have the ignition key and the park brake in the proper position (depending on wiring scheme chosen) to extend the jacks. If you attempt Auto-Level or manual extend you will hear a "deny" tone if the key or park brake is in the improper position.

AUTO-LEVEL:

Press the AUTO-LEVEL button and release. The system will send out a continuous series of beeps, the 'OPERATING' LED will flash RED to let you know AUTO-LEVEL is operating and will automatically level the coach. When completed, the keypad will signal a successful level with a dual- level tone. Press and release the POWER button. Note:

The keypad may be left on once level has been achieved. The keypad will enter "sleep mode" after five minutes of inactivity.
Note: The jacks down LED lights must be off for Auto-Level to function. If needed, press the ALL RETRACT button to clear and then Auto-Level should function.

Retracting the Jacks:

To retract all jacks simultaneously, press and release the All RETRACT button. All jacks will automatically retract and return to stowed position. The pump will run in retract mode until all the jacks are fully stowed (plus an additional 5 seconds) up to a maximum of 60 or 90 seconds).

This is the proper method for retracting the jacks prior to travel. You may stop the ALL RETRACT

by pressing any button on the keypad. Jacks may be retracted in pairs by using the UP▲ button for each end or side for levelling purposes however the

ALL RETRACT must be used to fully stow the jacks prior to travel. The jacks down LED's will turn off, indicating the jacks are in the "stowed" position.

Power OFF: Press and Release the Power Keypad Button.

Visually confirm all jacks are retracted prior to travel.

Setting the Null: The Null or "level position" has been preset from the factory. However, if the coach is not level following an attempt to AUTO-LEVEL, the Null is easy to reprogram. To set the Null, push and release the POWER keypad button to engage power.

The LED next to the POWER button should be lit RED when power is on. Level the coach by deploying jacks manually (using the DOWN ▼ keypad buttons, extend jacks until the coach is level), or by simply parking the coach on a level site. You do not need to have jacks deployed to set the Null.

Use a bubble level on a flat surface in the center of the coach as a reference. Once the coach is level, turn the POWER off at the panel. Depress and hold the AUTO-LEVEL keypad button. Continue to hold the AUTO-LEVEL button and press then release the POWER button, listen for a series of beeps. After the panel has beeped 5 to 6 times (can be more), release the AUTO-LEVEL button (the keypad will continue to beep if the AUTO-LEVEL button is held). The new Null has been set and the system will maintain this setting. Press and release the ALL RETRACT button to retract the jacks to the stowed position.

Manual Operation- Keypad # 3103

Power On:

Press and release the POWER keypad button to engage power. All LED's will come on then most will go out. The LED next to the POWER button should be lit RED when power is on. If an ignition and/or park brake disable circuit is present, you will need to have the ignition key and the park brake in the correct position (depending on wiring scheme chosen) to extend the jacks. If you attempt to extend jacks by pressing the DOWN▼ keypad buttons or all jacks with the AUTO-LEVEL button, you will hear a "deny" tone from the keypad if the ignition key and or park brake is in the improper position.

Planting the Jacks: The jacks will be extended in pairs Fronts or Rears or Left or Right

Using the DOWN▼ (extend) keypad buttons, extend the jacks until they contact the ground (this is referred to as "planting" the jacks). As you extend each pair of jacks the corresponding LED jack status lights will come on to indicate jack(s) are out of the "stowed" position. Jacks will be operated in pairs. Extend and plant the front jacks first. Then extend and plant the rear jacks. Only after planting the fronts and then the rears, should side to side corrections (levelling) be attempted. This process will stabilise all four corners and minimize twist prior to the levelling process.

Do not manually overextend jacks. This may cause unwanted stress on the motorhome or the jacks.

Leveling the Motorhome:

Use a bubble level on a flat surface in the centre of the coach as a reference. Level the vehicle by using DOWN▼ (extend) or UP▲ (retract) keypad buttons until the vehicle is level. Front to rear then side to side. Jacks will be operated in pairs. Do not attempt to lift the vehicle tires off the ground. Only lift (extend) enough to level and stabilize the unit. Once level, press and release the POWER button

to turn off the keypad. Note: The keypad may be left ON once level has been achieved. The keypad will enter “sleep mode” after five minutes of inactivity.

Retracting the Jacks:

To retract all jacks simultaneously, press and release the ALL RETRACT button. All jacks will automatically retract and return to stowed position. The pump will run in retract mode until all the jacks are fully stowed (plus an additional 5 seconds- up to a maximum of 60 or 90 seconds). This is the proper method for retracting the jacks prior to travel. You may stop the ALL RETRACT by pressing any button on the keypad. Jacks may be retracted in pairs by using the UP▲ button for each end or side for levelling purposes. However, the ALL RETRACT must be used to fully stow the jacks prior to travel. The jacks down status LED lights will turn off, indicating the jacks are in the stowed position.

Note: There are specific instances when manual extension of one or more jacks is inhibited (deny tone when Down is depressed). This situation is caused by the ‘anti-twist’ protocol in the software installed in the Controller. Simply stated, the ‘anti-twist’ protocol denies jack extension if the system senses that a specific corner of the coach is approximately 3 degrees higher than the rest.

You will be able to extend the other jacks to overcome the slope. If the system incorrectly senses excessive slope, this can be overcome by re-setting the null. This will allow manual extension of all jacks.

Purging the Cylinders of Air

Fill the reservoir fully with Dexron lll transmission fluid. Remove the fitting that is installed into port G-1 or attach a hose to the coupler and place into a clean container. Extend the cylinders. Maintain the fluid level in the reservoir between ¼ and ½ full. Do not allow the reservoir to run empty. If cylinder(s) will not fully extend, crack loose the upper hose(s) at the cylinder(s) and run the pump to extend until air is expelled.

Use Caution – hydraulic fluid will be under high pressure. Retighten the hoses and complete the extension of the cylinders(s). Maintain fluid level as described above. Reinstall the fitting or plug into G1 or remove the hose to the coupler.

Run the pump to retract the cylinders. Maintain the fluid level as above. Do not fill the reservoir to full until after the cylinders are fully retracted. If the fluid in the reservoir appears to be aerated (foaming), allow unit to rest until foam dissipates (approx. 5-10 minutes). Fully extend and retract jacks a minimum of 3 times. Maintain the fluid level at least ¾ full when the jacks are retracted.

The reservoir fluid level will be greatest when all jacks are fully retracted; the fluid level will be lowest when all cylinders are fully extended.

Manual Override

This pump is equipped with a manual override. Locate the 4 valves on the side of the manifold. Locate the screws recessed in the end of the appropriate cartridge valves. Using a 1/8th Allen Key, turn the screw(s) clockwise until seated in.

Remove the silver sticker on the front of the motor to reveal a hex key fitting. Using the appropriately sized hex key and a drill capable of 2000 RPM (minimum).

To Retract: Run the drill in the counterclockwise direction.
To Extend: Run the drill in the clockwise direction.

Caution!

Following manual override operation, failure to return all the valves to normal position may result in one or more of the jacks drifting down from their retracted position. Ensure all screws recessed in the of the cartridge valves have been screwed tight in the counterclockwise direction.

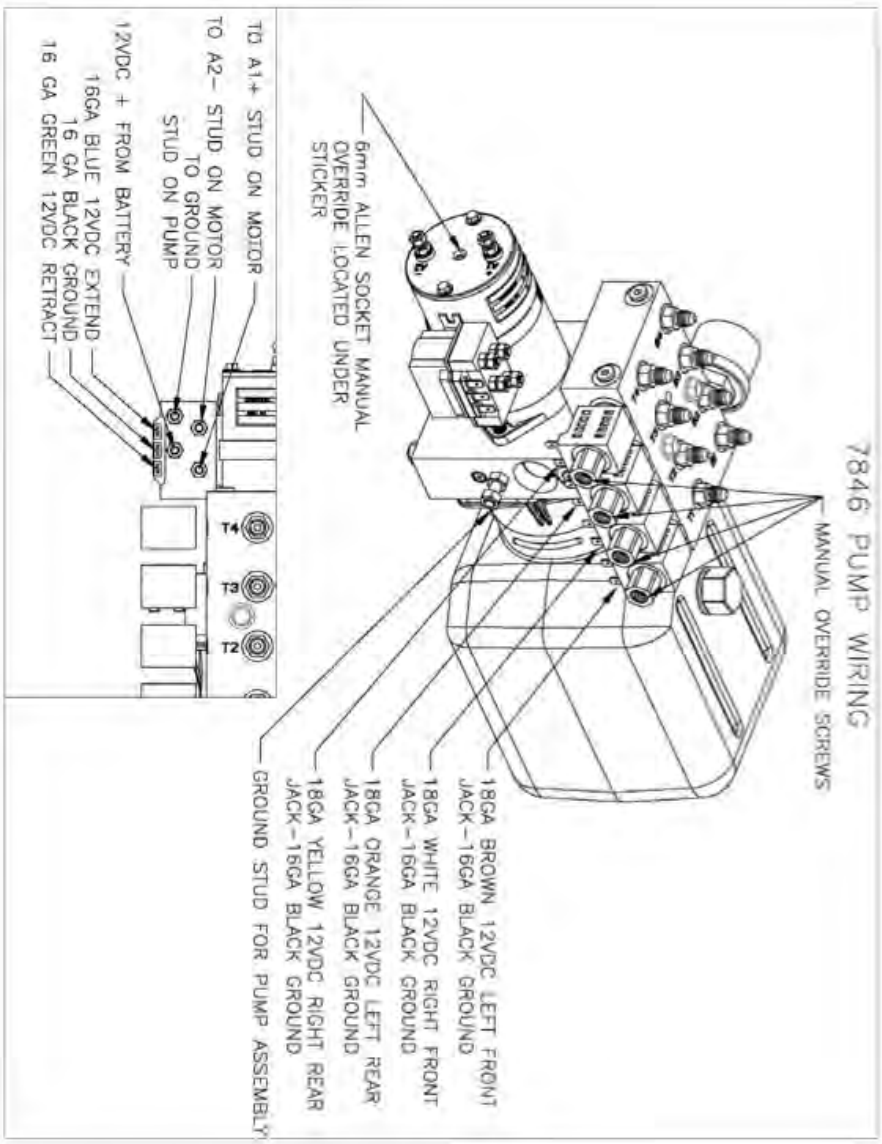

Bi directional Pump # 3195 & 3195KS

16

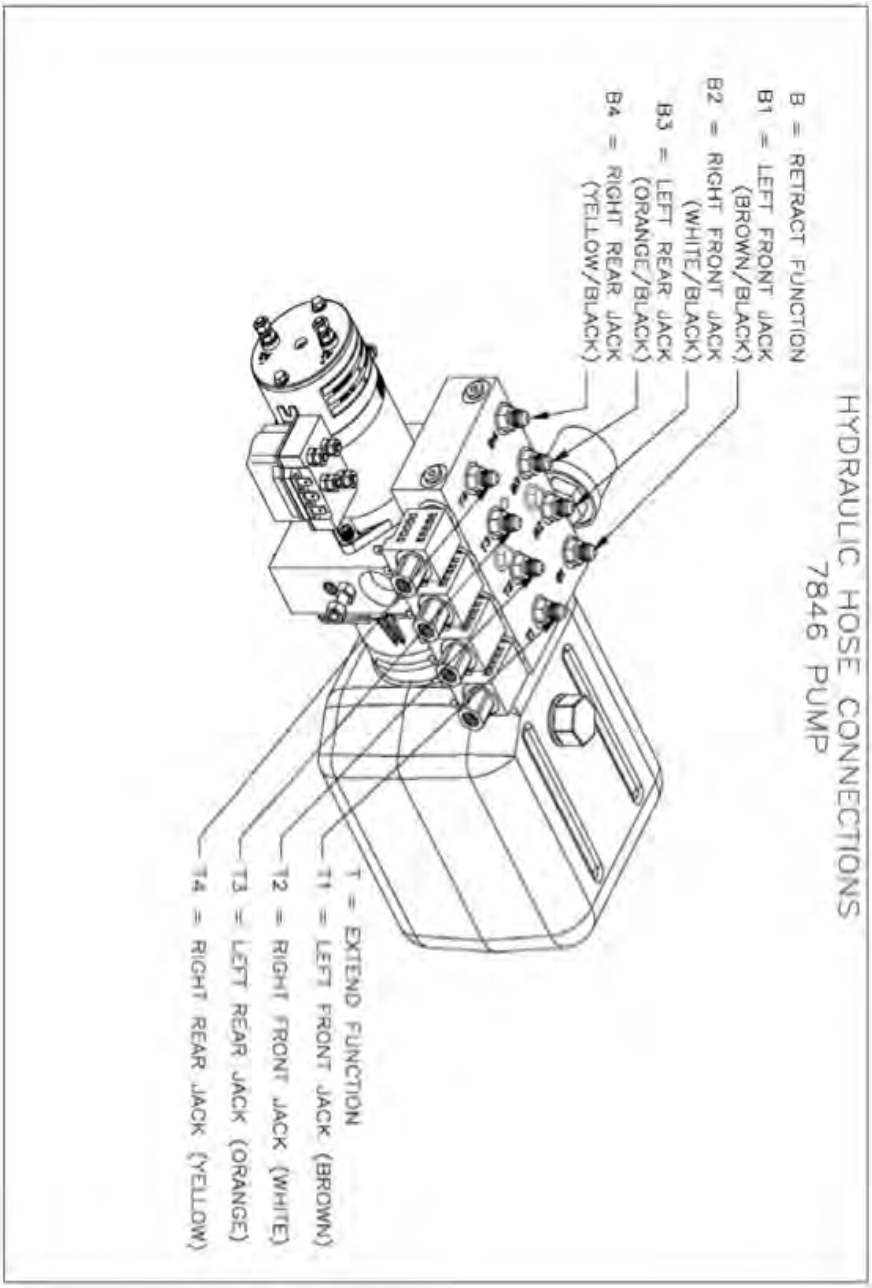

Bi directional Pump # 3195 & 3195KS

15

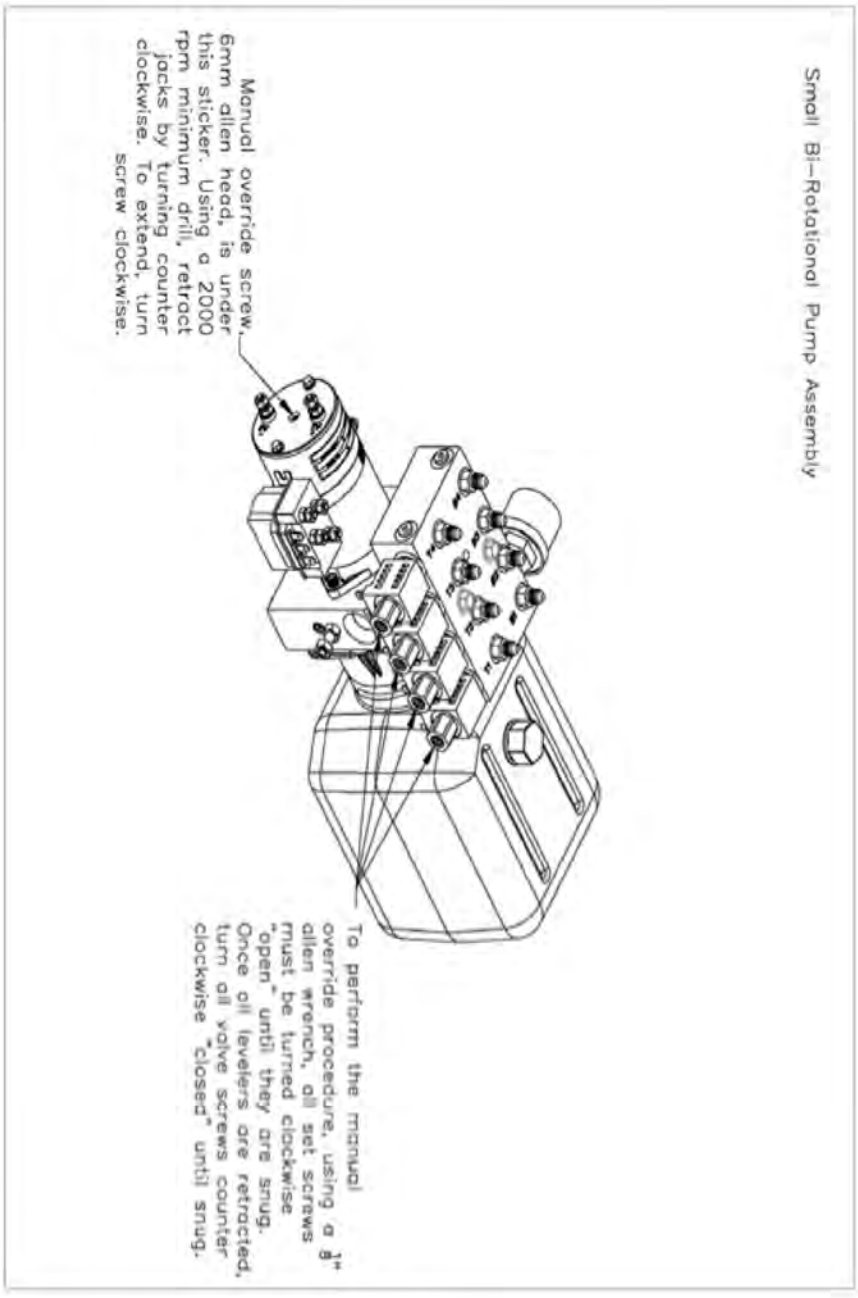

Bi directional Pump # 3195 & 3195KS

17

Troubleshooting Guide

Symptoms	Possible Cause	Solution
Keypad will not turn on	Blown fuse at pump harness	Replace fuse 20A
	Faulty ground or 12VDC power	Trace and repair
	Low battery voltage - min. 10.8	Charge batteries
	Defective keypad or controller	Call Leveling Jacks Australia
	Defective keypad or controller harness	Trace and repair
Keypad turns on but jacks will not operate	Low battery voltage to pump	Charge batteries
	Faulty ground or 12VDC power	Trace and repair
	Defective keypad or controller	Call Leveling Jacks Australia
	Defective pump motor or solenoid	Replace motor and/or solenoid
	Other system defect	Call Leveling Jacks Australia
Jacks will extend but will not retract	Low battery voltage - min. 10.8	Charge batteries
	Park brake not set	Set park brake
	If bi-rotational pump, bad motor or solenoid	Replace motor and/or solenoid
	Anti-twist software protocol has stopped further action	Lower opposite side of motorhome and/or reset Null and then level motorhome
	Ignition switch in wrong position	Check and change as needed
	Defective keypad or controller	Call Leveling Jacks Australia
	Faulty ground or 12VDC power	Trace and repair
	System defect	Call Leveling Jacks Australia
AUTO Level will not level	System Null is to set	Set Null
	Controller has been set wrongly or has moved	Check controller orientation
	Ignition switch in wrong position	Check and change as needed
	Damaged or defective keypad or controller harness	Call Leveling Jacks Australia
	Defective keypad or controller	Call Leveling Jacks Australia
	Other system defect	Call Leveling Jacks Australia

Troubleshooting Guide

Symptoms	Possible Cause	Solution
Auto-Level stops mid-cycle	Low battery voltage - min. 10.8	Charge batteries
	Excessive motion during leveling sequence	Reset keypad and retry
	Damaged or defective controller	Check and change if needed
	Damaged or defective keypad or controller harness	Call Leveling Jacks Australia
	Other system defect	Call Leveling Jacks Australia
Jack LED's on keypad staying on	Defective pressure switch or wiring	Trace/Repair or replace
	Defective keypad/controller or pump harness	Trace and repair or replace
	Defective keypad or controller	Call Leveling Jacks Australia
	Low system pressure caused by fluid leak or low fluid level	Correct fluid level or leak
Hydraulic pump inoperative	Low battery voltage - min. 10.8	Charge batteries
	Blown 20A fuse on pump harness	Replace fuse or breaker
	Faulty ground or 12VDC power	Trace/Repair or replace
	Defective pump motor or solenoid	Replace
Jack(s) bleed down from levelled or stowed position	Air in hydraulic system	Purge/bleed air
	External fluid leak	Trace and repair
	Defective valve in pump	Clean or replace valve
	Defective hydraulic jack/cylinder	Replace hydraulic cylinder
Jack(s) are jerky or noisy when extending or retracting	Air in hydraulic system	Purge/bleed air
	Fluid level low	Check fluid level and top up
Jack's will not retract from extended position	Low battery voltage - min. 10.8	Charge batteries
	Low battery voltage or poor ground	Change batteries/check ground return
	Damaged/Defective harness from keypad to controller or controller to pump	Trace and repair
	Fluid level low	Correct fluid level and add
	Defective pump motor or solenoid	Replace

Product Warranty Guide

Titan Stability Solutions Pty Ltd trading as Redfoot Levelling Solutions

1. Only warranty claims with prior written or verbal authorisation from Redfoot Levelling will be recognised, all other claims will be denied.
2. Redfoot Levelling warrants levelling system components for a period of One year from the date of original sale of the vehicle. This warranty covers defects in material and workmanship only. Redfoot Levelling is not liable for any damage due to abuse, neglect, misuse, negligence, misapplication, error of operation, accidental or purposeful damage or damage due to an "Act of God" such as, wind or rain damage, flood, lightning or other natural causes of the like. Redfoot Levelling limited warranty is applicable to the Redfoot Levelling components only and does not apply to the vehicle, apparatus, or property to which it is attached. Warranty parts will be shipped at no charge if the repair is authorised by Redfoot Levelling representative. Purchased components used in authorised warranty repairs will be reimbursed at the original purchase price. **ALL product prior to return, must be authorised by a Redfoot Levelling representative. Connotes will be supplied for their return unless prior arrangements have been made. Installers must receive the appropriate Scope of Works from Redfoot Levelling prior to the commencement of any work**.
3. Labour and freight expenses due to warrantable parts defects or workmanship will be reimbursed for the period of One year from the date of the original sale of the vehicle. Freight expenses will either be prepaid by Redfoot Levelling or reimbursed at the Road Logistic rate only. Any additional shipping charges or requirements are the obligation of the vehicle owner or service centre performing the warranty repair. The owner or Service Centre's obligation may include overseas shipping charges, border fees, and any other additional fee of the like.
4. Warranty labour will be reimbursed only for claims that have prior written or verbal authorisation from a Redfoot Levelling representative. Warranty labour compensation is required to correspond with the "Warranty parts replacement time guideline" published by Redfoot Levelling. Any warranty repair not listed on this guideline will require prior authorisation from an Equalizer Systems representative. A reasonable time allowance will be determined by the Equalizer Systems representative. Any warranty repair that is not listed on this guideline that is performed without prior authorisation will be denied without exception. Time associated with learning about the repair or excessive diagnostic and installation time will not be reimbursed. Warranty labour will be reimbursed at the authorised service centre's published shop rate for that region. Overtime labour will not be reimbursed without exception.
5. Labour, parts, and freight credit (if applicable) will be sent after the parts are tested and the warranty claim is validated. Returned parts that are found to be in normal operating condition are not warrantable and will be charged to the owner or service centre. Redfoot Levelling reserves the right to charge back the service centre for labour claim payments previously submitted if the installation of the warranted part is found to be inadequate at a later date.
6. Claims will be denied if the date submitted is greater than 30 days from the repair.

7. Prior authorisation is required before parts may be sent back by to Redfoot Levelling. Redfoot Levelling will supply a connote for the return goods.
8. Complete systems are not warranted unless authorised by a Redfoot Levelling representative. There are absolutely no exceptions to this clause.
9. Consideration should be taken regarding the location and protection of Redfoot Levelling's components prior to installation. Please reference our installation manuals for recommended locations and maintenance, or visit www.redfootlevelling.com.au for more information. The failure of any Redfoot Levelling components due to extreme environmental conditions, improper installation or lack of maintenance will not be covered under warranty.
10. Warranty coverage for parts or systems sold by non-authorised resellers (such as live or internet auctions) will be at the discretion of Redfoot levelling.
11. This warranty begins upon the sale date of the vehicle and is transferable, with limitation, to the subsequent owners upon furnishing the original sale date of the vehicle and proof of purchase.
12. Redfoot Levelling is not liable for loss of time, manufacturing costs, labour, material, loss of profits, direct or indirect damages incurred by the vehicle manufacturer.
13. Excessive warranty labour resulting from inadequate access to the Redfoot Levelling product will not be reimbursed.
14. Redfoot Levelling will not pay mark-up on warranty parts unless required by law.
15. Travel expenses, hotel, telephone, fuel, or any other expense of the like are not covered under warranty.
16. All "out of warranty" repairs will have a flat rate inspection fee of $190 Inc GST. There will be an additional charge of $95 Inc GST per hour for repair work carried out beyond the inspection diagnostic

Replacement Parts:

Replacement parts are warranted under the same guidelines listed above for the remainder of the original warranty or 90 days, whichever is longer. Proof of warranty repair date and original vehicle purchase date are required via any means possible.

No additional warranties expressed or implied are authorised by Redfoot Levelling.

Titan Stability Solutions Pty Ltd Trading as Redfoot Levelling Solutions

Unit 5 Euro Business Park

26 Weippin Street

Cleveland QLD 4163

Ph: +61 7 3286 1199

Email: sales@titanrv.com.au