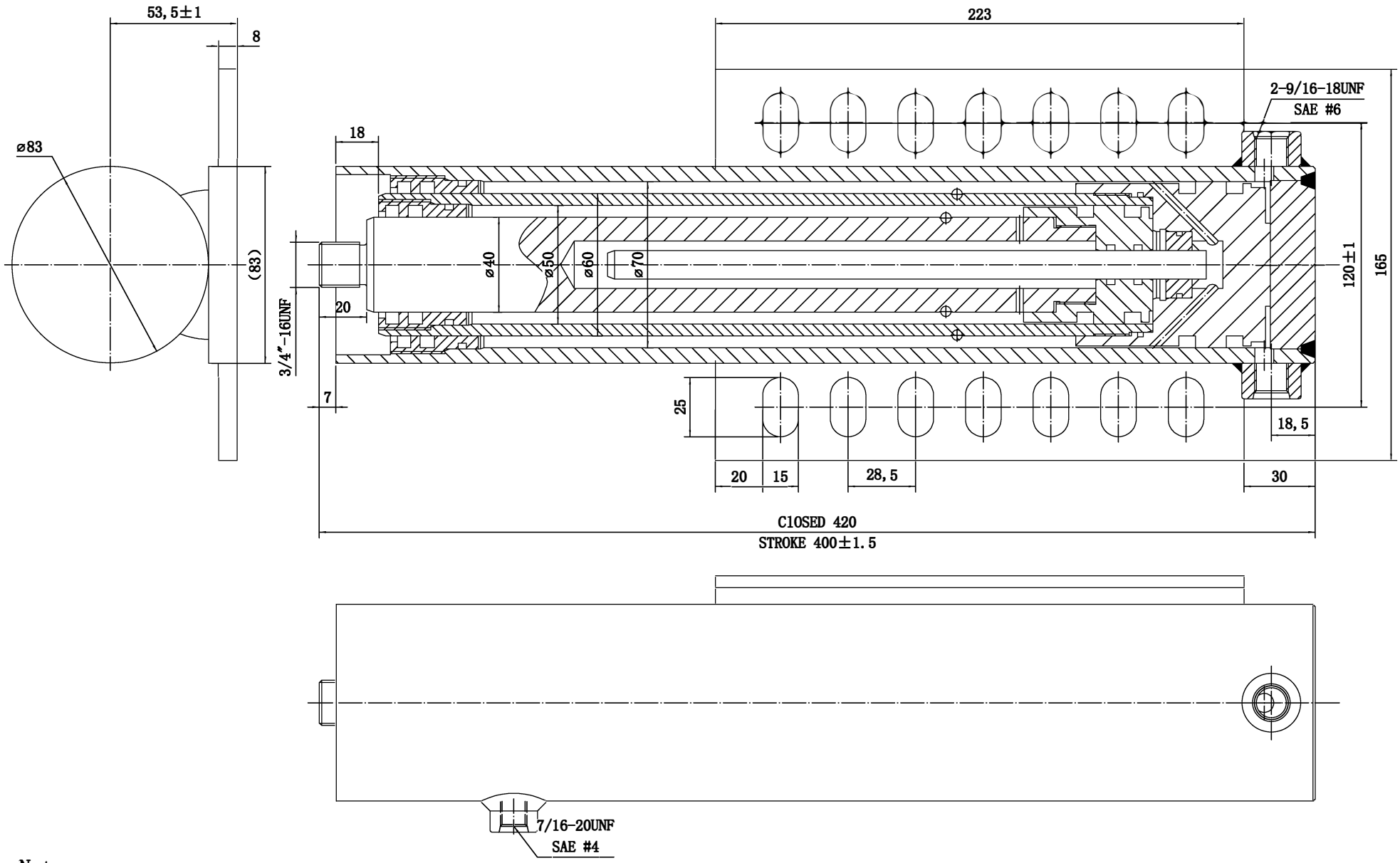

Note:

1. Working pressure: 16 Mpa
2. Test pressure: 24Mpa:
3. Min output thrust: 2.5 tons

Mark	Total	Change No.	Signature	Date
Design		Jerry	Standard	
Draw			Reviewed	
Checked		Lily	Approved	
Crafts			Date	2024.12.12

2TSG-60x400

Pattern Marker	Weight	Scale
	16Kg	
Total No.	No.	

REDFOOT LEVELLING