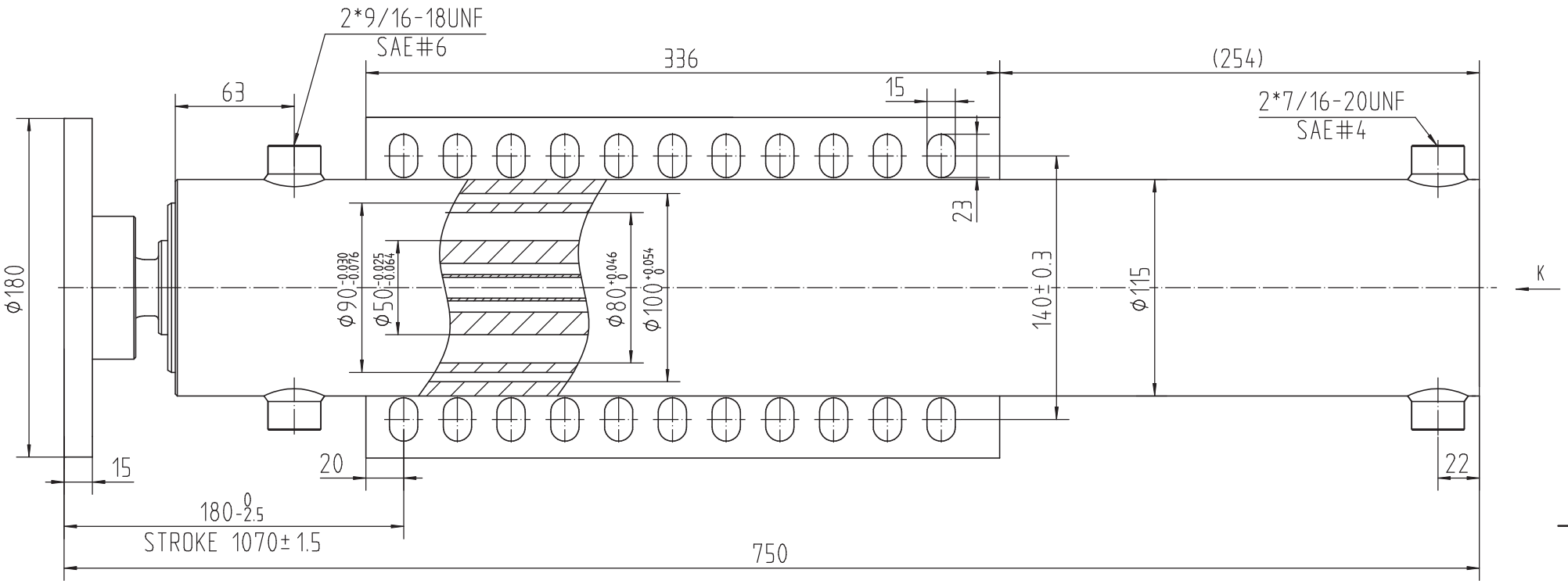

VIEW "K"

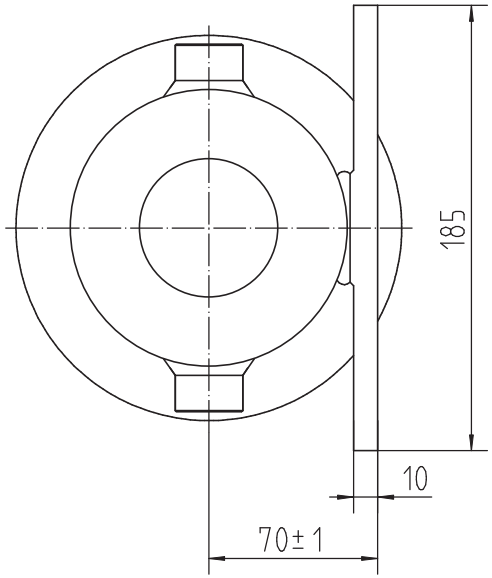

Mark	Total	Change No.	Signature	Date	2TSG-90x1070	Pattern Marker	Weight / Scale
Design		Jerry	Standard			Total No.	No.
Draw			Reviewed		R2001208	REDFOOT LEVELLING	
Checked			Approved				
Crafts			Date	2021.12.08			