REDFOOT®

LEVELLING

Autolift Caravan Bracket Install Manual

Bracket types available in kit combinations

Under Chassis Mount – P/N TI-A-0008

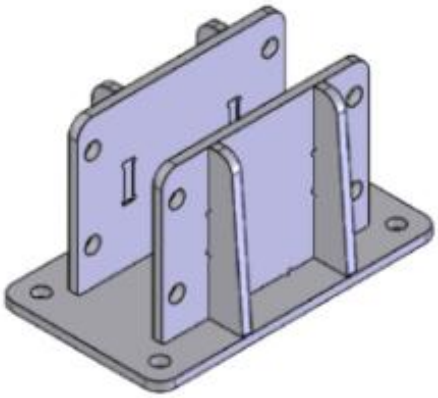

Side Mount '50mm offset' Chassis Mount - P/N TI-A-0011

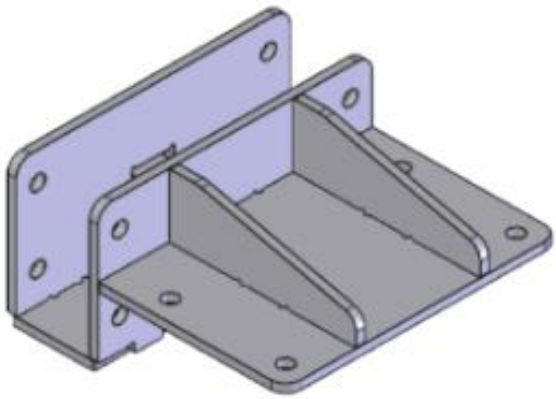

Side Mount ‘95mm offset’ Chassis Mount (only suitable for 150mm RHS Chassis)
P/N TI-A-0012

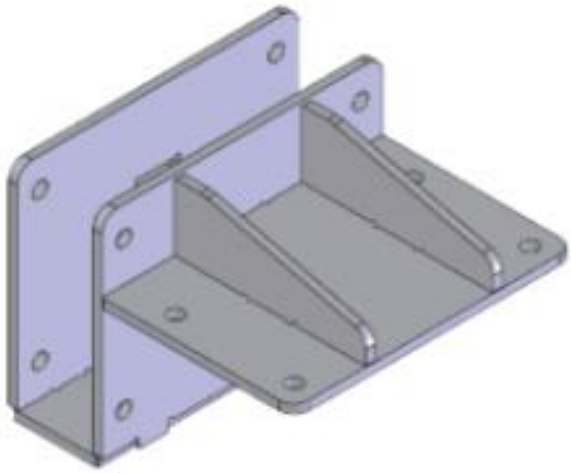

Each bracket is designed to be attached around the RHS chassis rails for these sizes.
H 100mm x W 50mm - H 125mm x W 50mm - H 150mm x W 50mm

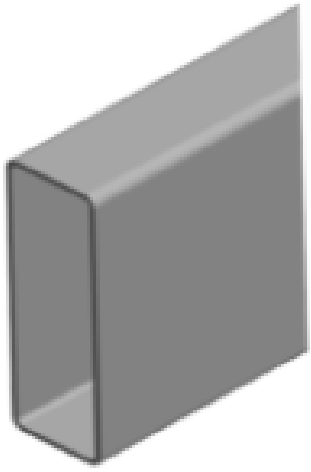

Fittings included in each kit

- 16 x m10 x 80 Bolts
- 16 x m10 x 30 Bolts
- 64 x Washers
- 32 x Nyloc Nuts

Optional 50mm bracket spacers for extra high Caravans

(Spacer brackets will include 4x m10 x 80 bolts – P/N TI-P-0020)

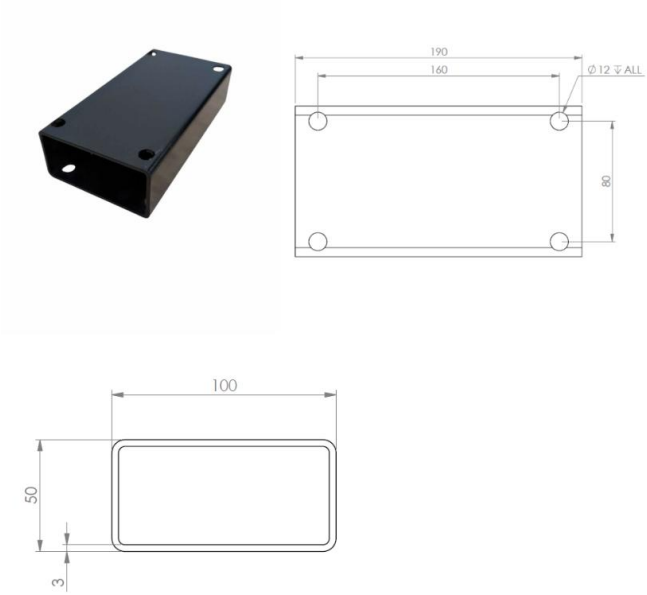

Tools required for installation

- Power Drill and 11mm drill bit
- Socket set and spanners
- Hole punch
- Paint marking pen
- High corrosion resistant paint (Used for holes once drilled)
- Torque wrench
- Measuring tape
- Spirit Level
- Shims (may not be required)

Bracket locations

It is recommened to have the front jacks swing in opposing direction to the rear jacks, this helps with stability. When installing the Redfoot Levelling AutoLift system to caravans you must always attach the brackets to the main parrellel chassis rails or A-frame. Location points can vary and we recommend attaching the rear jacks no more then 1.5m behind the rear axle. We recommend the front jacks be installed in the area where the A-frame meets the parallel chassis rail.

Important: Never attach brackets/jacks to sub frame or where the existing stabiliser legs are postioned. See image below.

How to measure?

Firstly, position the caravan on a flat hard ground surface. Once you have postioned the caravan you will then need to level the caravan using the jockey wheel. Using a measuring tape, ensure the chassis is of equal distance to the ground both front and rear. Record the measurements as you will require these later. See the image below.

Jack Lengths

There are two different size jacks, the set clearance is the distance between the bottom of the jack foot and ground when the jacks have been deployed. This is how you measure the correct size jacks for your Caravan.
Make sure to consider the size jacks you have in the kit provided. See diagrams below.

Standard Jacks 300mm retract

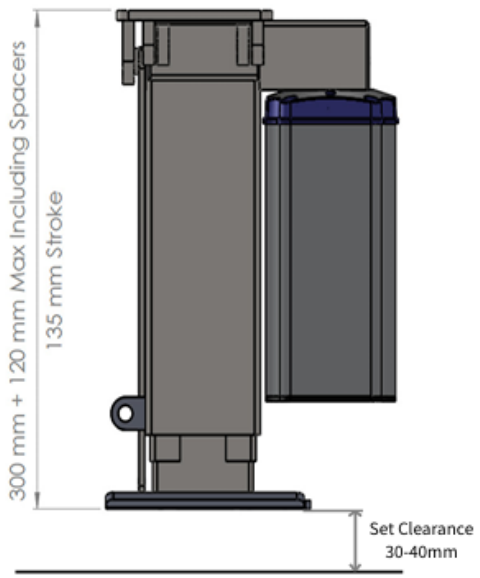

Large Jacks 375mm retract

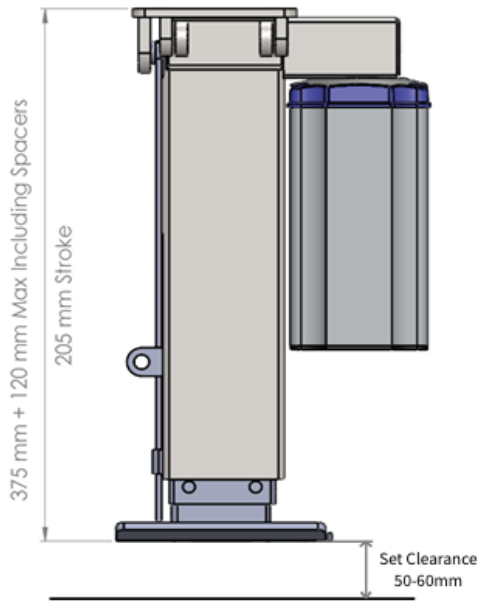

In each kit you will receive 10mm, 20mm and 40mm spacers to expand the jack up to 120mm in additional length. The spacers have been designed to allow you to achieve the desired set point once the jacks are mounted to the brackets bolted to the chassis.

To adjust the jacks with spacers, refer to the Redfoot Levelling AutoLift installation manual.

When measuring from the under chassis to ground you must include the set clearance space recommended in the diagram above.

Example. If you have measured an under chassis to ground clearance of 370mm, the desired out come will be;

Standard Jack length	= 300mm
Set Ground Clearance Required	= 40mm
Add 1x 20mm and 1x10mm Spacer	= 330mm

Scan the QR Code to watch tips on how to measure up your caravan and what to look for.

Mounting the brackets

Once you have found the optimal location along the chassis rail, prior to installing make note of any obstructions. Further, consider the swing of the jack once installed, handbrake wires and suspension mounts.
Try to get both left and right-side brackets mounted as symmetrical as possible, this helps with weight distribution and system levelling capabilities.

Once suitable mounting locations are found, mark where each hole will need to be drilled with the bracket flush up against the bottom of the chassis.

Use a punch to mark the center of the bracket hole, this will prevent the drill bit from walking.

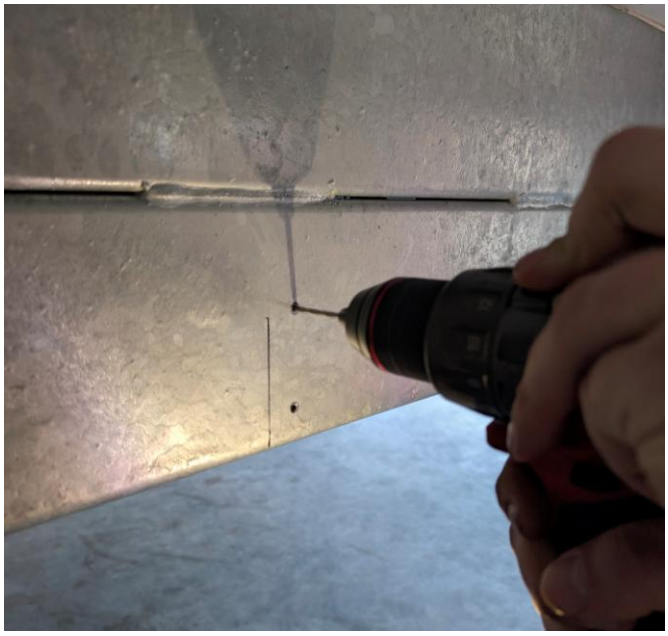

Before you start drilling, check which side of your chassis has the wiring loom. Make pilot holes with a 5mm drill bit, try not to go all the way through the chassis to avoid hitting any wires.

Step up your drill bit until you reach 11mm. As you can see here there is wires running through the chassis that need to be avoided.

Use wax and grease remover to clean the area and holes then apply an anticorrosion paint like a cold galvanizing compound to prevent rust.

You may need to use a small screwdriver to lift the wires inside the chassis to get the bolts to slide through. Ensure you use washers with each bolt, unless the bolt interferes with the spring on the jack.
Use a spirit level to get the bracket level, you may require tightening the bottom bolts extra tight to pull the bracket in, you may also require shims behind the top section on the bracket.

Next, measure the distance from the mounting plate of the bracket to the ground. The van chassis will need to be as level as possible, see Autolift install manual for how to add spacers to expand the jack.
If you are using optional under chassis bracket spacers as shown, install them using washers provided.

If you are using optional bracket spacers, you will need to install them with the jack now.
Install the nuts on the top of the bracket, this means when the jack swings into retract is doesn't hit the thread.
Lastly, use a wrench to fasten the jacks to each bracket with a washer and nyloc nut to 30NM.

The finished installation should look as shown.
While the chassis is level on flat concrete, check both the front and rear jacks have approximate set clearance from bottom of the foot to the ground of 30-40mm (standard jacks) and 50-60mm (larger Jacks).

Redfoot Levelling Pty Ltd
Unit 1, 7 Abeles Street
BARINGA QLD 4551
Ph. +61 7 5228 0211
E.info@redfootlevelling.com.au

REDFOOT
LEVELLING