REDFOOT®

LEVELLING

AutoLift System

Installation / User Manual

Updated: April 2026

Before starting the installation, check the content of all boxes received against the picking slip which is attached to the outer of the main carton. Please call Redfoot® Levelling immediately if there is a discrepancy!

WARNING!

This is a 12VDC System **DO NOT** connect to your 24Volt House Battery

Important Must Read Before Use:

Redfoot Levelling does not promote the use of our levelling systems as a 'Tyre Jack' solution. If the owner/user were to use the levelling system to lift the vehicle off the ground to have access underneath the vehicle or for changing a tyre, they must use Jack Stands as the primary support. Jack Stands should be always in use as the primary support when wheels are off the ground for long durations.

Modification of any factory-supplied item may result in the denial of all warranty claims. Call Redfoot Levelling Solutions Technical Support prior to any modifications.

Redfoot Levelling Solutions offers full installation support for authorised approved Installers only.

End user installers must read and accept our Warranty and Terms and Conditions on the Invoice issued with this purchase. For correct installation, please follow the instructions in this manual, Redfoot Levelling is not responsible for damage caused by improper installation or improper use of the device.

End user must check jacks have deployed correctly before using 'auto' or 'manual' functions. If jacks are not completely vertical **do not** use the system, make sure there is space between the ground and the bottom of the jack before using any functions, jacks must plant in the vertical position only. Redfoot Levelling is not responsible any damages caused by incorrect planting or angle of jacks.

End user must visually check all jacks have moved into the stowed away position before driving away, **do not** rely on built in safety features to ensure the jacks are completely stowed. Redfoot Levelling is not responsible any damages caused by incorrect stowing of jacks.

- Always use the system with the handbrake applied and the gearbox engaged (if applicable).
- Always check that the jacks rest on a surface suitable to withstand the pushing force.
- It is advisable to use the supplied plates to place between the ground and the base of the jacks for greater weight distribution.
- In manual mode, never remove all four tires from the ground if the parking space is on a significant slope.
- If the vehicle is equipped with adjustable air suspension, do not change the suspension position when the vehicle is stabilized with jacks.
- Before folding the jacks into the stowed position, check that there is enough space between the base of the jacks and the ground for rotation.

WARNING! Failure to follow these recommendations may cause damage to the leveling system, to people or property.

Use fixing points with sufficient stability. Consider every jack can lift to 2500 kg. If necessary, the fixing points at the chassis must reinforced with adequate parts.

Consider the required space between jack and ground of 30mm at least in vertical position.

Do not forget to install the fuse in the +12V power line and make sure a professional execution of electrical works to guarantee the safety functions.

Follow the instructions step by step and complete the chapter “Initial operation” after installing.

Contents

Tools Required for Installation 5
Additional Items Required for Installation 5
Prior to installation 6
Adjusting the jacks using spacers 8
Installation 10
Installing the jacks 10
Installing the control box 11
Electrical Connections 11
Connecting the jacks 13
Securing the cables 14
Connecting controller to battery 14
Initial Operation 15
Adjustment of limit switches 16
Programming the remote 18
Control Panel – how to operate 19
Button layout 19
LED layout 20
Description of functions 21
Blocking of functions with ignition 24
Signalling of malfunctions 24
Troubleshooting 25
System cannot be switched on 25
LED START does not light up 25
The vehicle is not level after using AUTO function 25
Resetting the auto level parameters 25
Emergency operation 26
Technical data 27
Product Warranty Guide 28

Tools Required for Installation

- Ratchet, sockets, and spanner set
- Wire cutters / crimpers
- Electric drill and drill bits

Additional Items Required for Installation

- Loom clips/ cable ties (to secure harnesses and hydraulic hoses to the vehicle)
- Self-tapping screws or pop rivets
- Circuit breaker 80 amp (comes with basic inline fuse)

Prior to installation

It is important to first measure the chassis to ground height on flat ground, preferably on a level concrete slab. Using this measurement, you can determine what length to set your jacks to.
There are two different types of jacks, standard and large, each have different minimum set ground clearance requirements for jack installation. Refer to the below charts.
If you ignore the minimum set ground clearance requirement, uneven ground or small bumps can lead to the jacks not deploying correctly and potentially cause damage to the system. If required, it is possible to set the jacks with higher ground clearance, however doing so will reduce the amount of lift when levelling.

Jack Type	Set ground to base of jack (mm)
Standard jack	30 – 40 mm
Large jack	50 – 60 mm

Figure 1. Ground clearance reference chart (Not to scale)

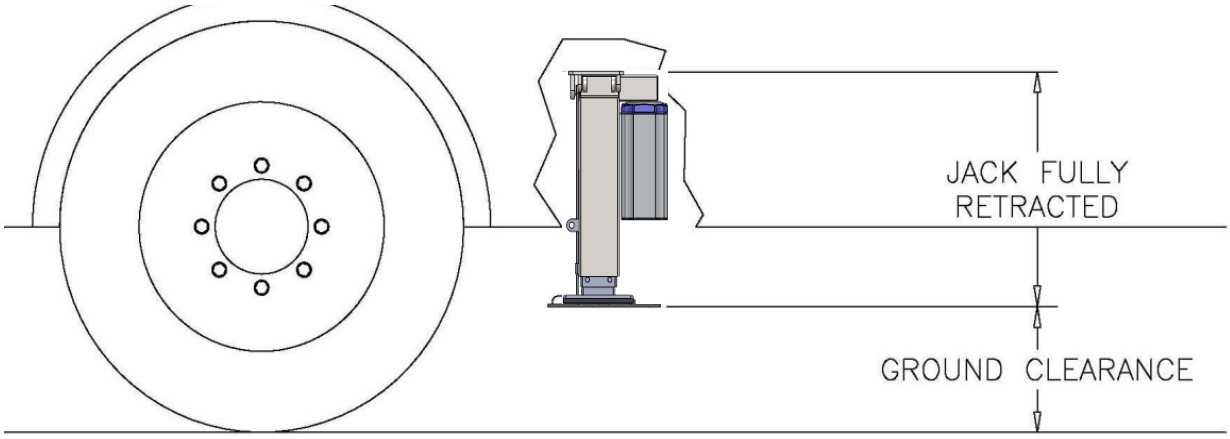

Any concerns or queries can be directed to Redfoot Levelling (07) 5228 0211.

For higher chassis, the jacks can be extended using spacers. The maximum extension possible is 120mm to reach the desired height. Using the measurement from chassis to ground, minus the minimum jack clearance, you will be able to work out what spacers are needed.
E.g. Chassis to ground is 390mm and using a standard jack, which is 300mm. Subtract at least 30mm (min jack clearance), you will need to install no more than 60mm of spacers.
390mm – (300mm + 30mm) = 60mm max
Note: Mounting brackets can change the distance from mounting point to ground, please refer to the bracket install manual before setting extensions on jacks.

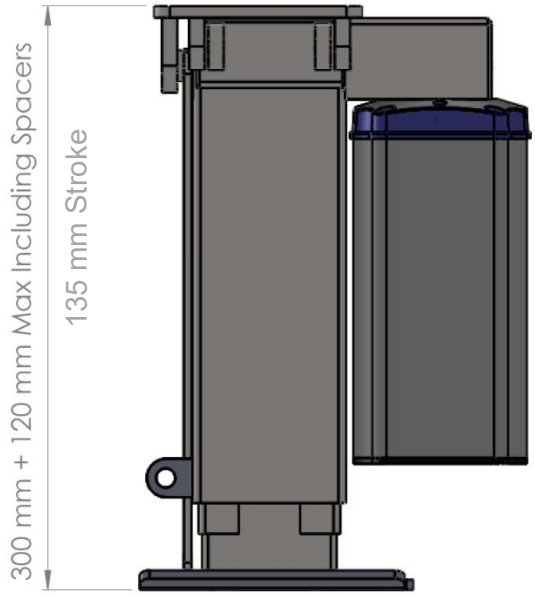

Standard Jack

Extension of the column – modified Basic lengths:

Standard size 300 mm

Measurements obtained in mm:

320 - 330 - 340 - 350 - 360 - 370 - 380 - 390 - 400 - 410 - 420 mm

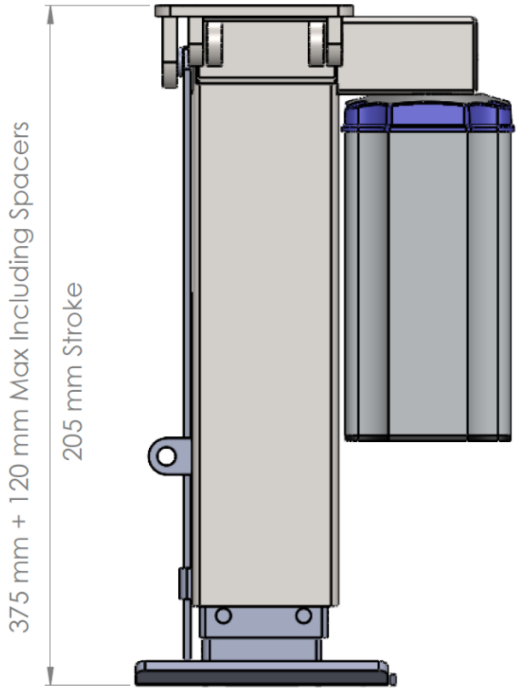

Large Jack

Extension of the column – modified Basic lengths:

Standard size 375 mm

Measurements obtained in mm:

395 - 405 - 415 - 425 - 435 - 445 - 455 - 465 - 475 - 485 - 495 mm

Adjusting the jacks using spacers

Step 1. REMOVE JACK STEMS - Using circlip pliers carefully remove the circlips without stretching the circlip too much. It is best to come from the side closest to the motor and push the circlips out.

Step 2.ADD SPACERS – place and stack the required extension spacers over the foot stem, this will leave the holes available to drill out. Make sure to have the pressure switch/push bar extension plate installed last as shown.

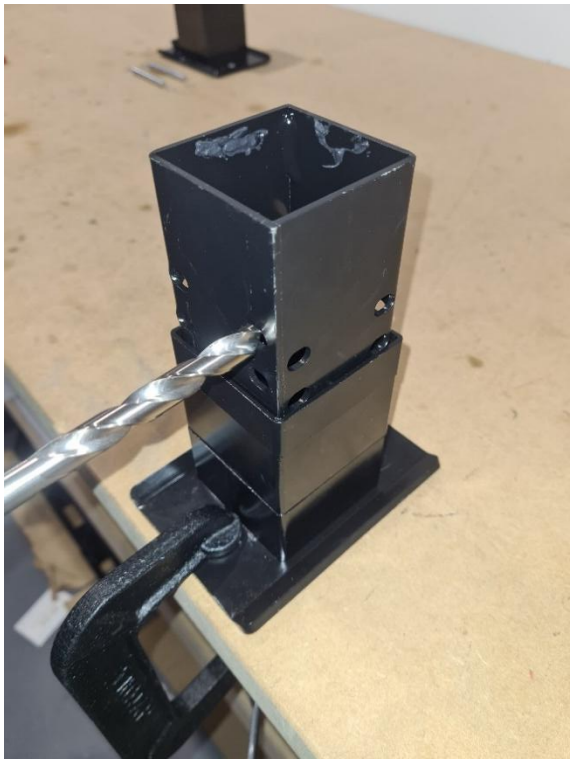

Step 3. DRILLING THE PIN HOLES - Clamp the foot firmly to the bench and using a 8.5mm drill bit, drill out the two holes (do this to the holes on opposing sides sides). This helps to insert and align each of the pins.

Step 4. INSERTING PINS - Be mindful not to use excessive force putting the pin back in. This can cause damage and not allow the circlip to reseat. If it doesn't slide through take it out and drill hole to no more than 9mm a hole.

The switch/bar spacer must be installed as shown. Failure to do so will cause incorrect operation of jacks.

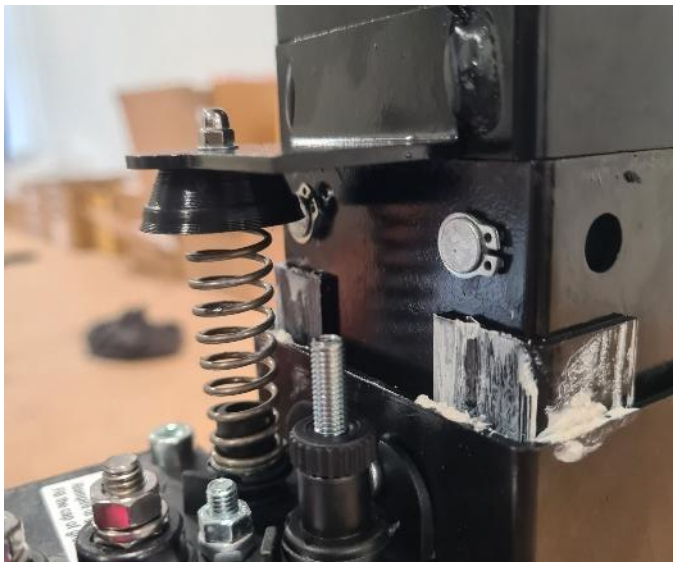

Note: Each kit comes with enough spacers to add a maximum of 120mm extension to each jack leg stem. There are 3 sizes, 10mm, 20mm and 40mm. Remember the pressure switch/push bar plate is 20mm.

When including a 10mm spacer into your stack you will be required to use the holes as highlighted in the picture with the red arrows. The green arrows are the typical holes used when <u>not</u> adding any 10mm spacers

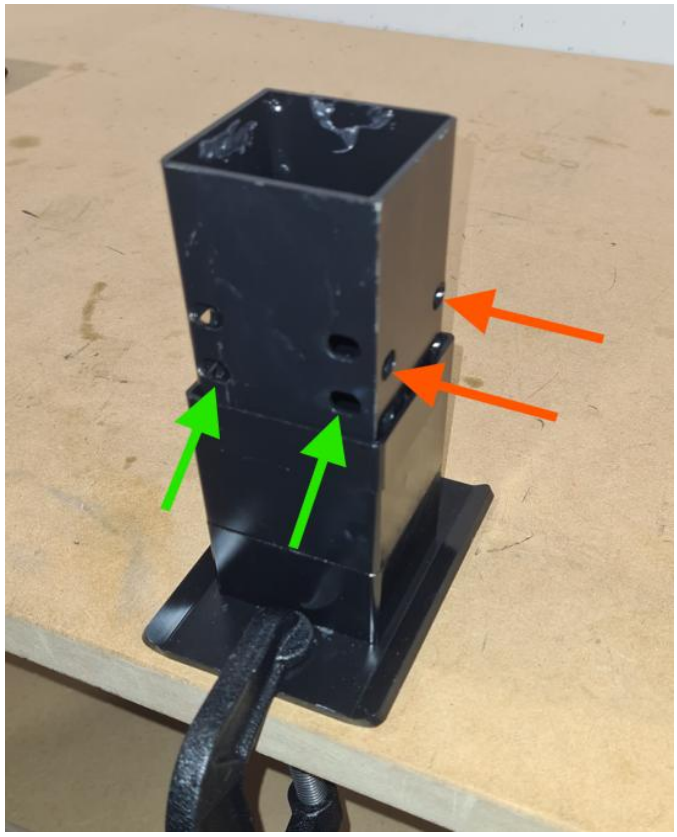

Installation

Installing the jacks

To get the best stability and avoid approach and departure clearances, fit the jacks so that they fold inwards towards the centre of the vehicle.
There are 4 bolt mounting points on each jack, all of which need to be used when mounting the jacks to the vehicle. Refer to the bracket installation manual specific to your installation. First, mount the brackets to the chassis, then mount the jacks to the brackets. Check and measure the space required for the jacks to swing back, there must be no obstructions during the swing into the stow position.

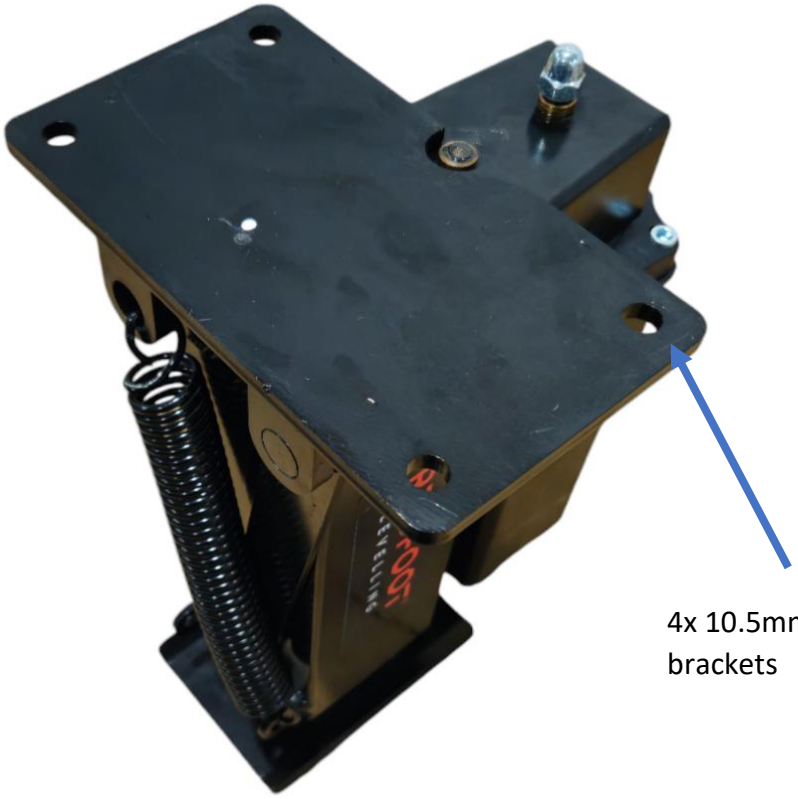

Installing the control box

Fit the control box underneath the vehicle at the most centre point. The control box base is to be mounted to the underside of the vehicle and parallel to the floor. There is a label on the control box base indicating the front, the box should be positioned with this label towards the front of the vehicle. See below the correct location for mounting.

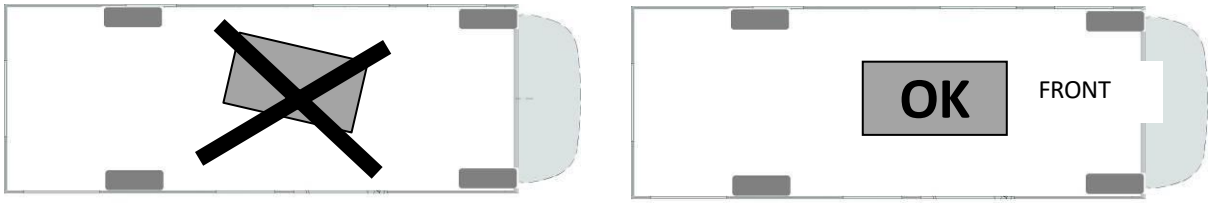

Electrical Connections

The cables on the control unit are numbered. Each number must go to the correct jack as shown in the diagram below. E.G. Front left no. 1, Rear right no. 4 etc.

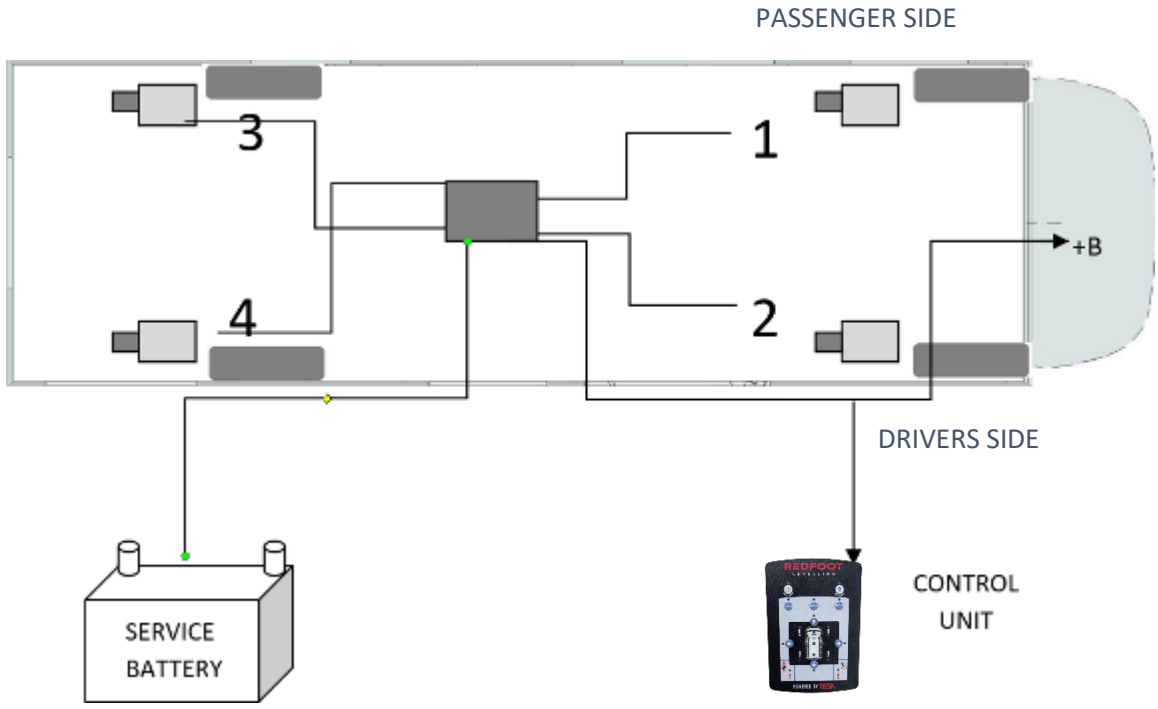

Labels are found inside the control box.

Ensure the control box label 'FRONT' is closest to the front of Van. The box must be mounted flat to the floor underside.

Connecting the jacks

Connect the coloured wires to their corresponding-coloured label posts using 10mm and 8mm spanner/sockets. Place the cable terminal onto each post then the spring washer and finally the nut on top. Tighten the nuts moderately until the cables can't be wiggled. When connecting the white wire make sure it does not touch or obstruct either of the two limit switches.

After fitting (purple cable only) make sure to fill the rubber cap with the supplied grease. Do not grease or fit rubber cap before securing cables to avoid grease affecting contact with the post. The grease avoids accidental ground with other connections caused by splashes of water and/or debris.

Securing the cables

The wiring should be secured in a way that it does not obstruct the folding of the jack. The best method is shown below. Make sure the cable is run in a way that the pivot of the jack does not pull on it or terminals.

Connecting controller to battery

When connecting to the battery, be sure to sure the supplied inline fuse to avoid damage to the vehicle and control unit. The fuse must be in line to the +12V red cable.

Fitting the control panel

The control panel should be fitted in the motorhome near the door in a position which is reachable from inside and outside. Pay attention for enough space around the panel for special functions with both hands. Connect the network cable on the backside of the panel and the control unit

The ORANGE (+ B) cable that is to be found together with the control panel wiring must be connected to a + 12 Volt (POSTIVE IGNITION) when the vehicle starts the key is activated. The connection of the orange cable is essential for the correct function of the safety features. It prevents the accidental lowering of the jacks while driving.

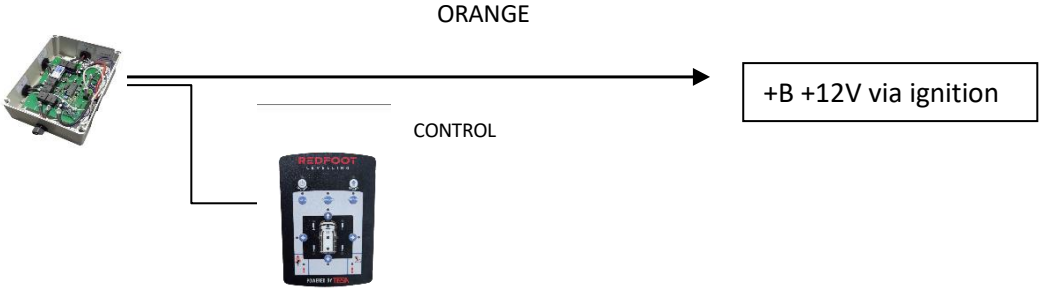

Initial Operation

After the wiring connections are finished, press the on/off button found on the top left corner of the control panel. All the different sets of LEDs will flash in series along with two initial beeps, after which only two LEDs will be on, the on/off LED and the get up LED. This means the wiring is correct and you can turn the system off again.

The panel will display a status light or lights in the middle of panel. These status lights will display the lowest ground point underneath the van. The status lights will change depending on the slope and position of the van. The green light will illuminate once you have achieved level.

Nose parked downhill

Drivers side downhill

Level

Adjustment of limit switches

Each jack is equipped with an adjustable limit switch, this must be adjusted correctly to stop the motor and set the stow away angle of each jack. To set these you must enter the system into calibration mode.
Refer to below keypad layout diagram. To enter calibration mode press and release the power button, immediately during the keypads lighting sequence, press and hold all four jack arrows until the manual LED starts flashing. Press and release the manual button, it should now stay consistently illuminated. In this mode, each jack can be moved separately up or down to adjust the limit switches.

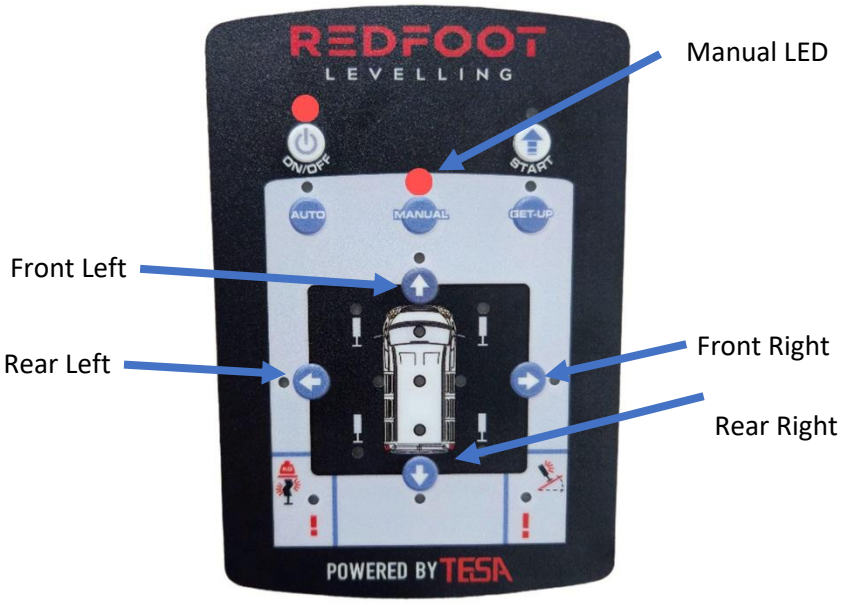

To set limit switches you will need to press the manual button and a selected jack arrow button at the same time, this will operate and extend the jack until it reaches the vertical position. The system answers with consistent beeps and the selected jack light will flash. To retract the jack to the stowed position, press the jack arrow button.

To adjust, loosen the lock nut by turning anticlockwise. Hold the screw and turn clockwise to allow the screw to extend further (see picture next page). The shorter the screw length or exposed thread, the higher the stowed position and longer time the motor will shut off. This adjustment process may need to be repeated a few times. Once completed, make sure the lock nut is secured tightly. Do this for all 4 jacks and then finish the calibration by pressing on/off.

The limit switches must touch before the mechanical end point of the jack. Leave enough clearance between the cut-off point of the limit switches and the mechanical stop of the jack to compensate for moments of inertia. There needs to be at least 1cm of play up to the mechanical stop from the limit switch. If the limit switches are not adjusted correctly most of the functions with be blocked. If unsure, call Redfoot Levelling for assistance on 07 5228 0211.

Scan this QR Code to watch explanation video.

Programming the remote

The remote control is programmed at the factory and paired the control box. In the case of damage or loss, a new remote can be paired.
To reprogram the remote, make sure the system is turned off at the control panel. Press and hold the start and on/off buttons on the control panel at the same time, do not release. While holding, press start on the remote. You will hear 2 beeps to confirm the save. Wait 2 seconds and then press auto on the remote, you will hear 2 beeps to confirm the save. Wait another 2 seconds, then press get up on the remote. You will hear another two beeps. You can now release the start and on/off buttons on the panel.

Press and hold at the same time

Press on after the other

Start – Auto – Get-up

Scan this QR Code to watch explanation video.

Control Panel – how to operate

Button layout

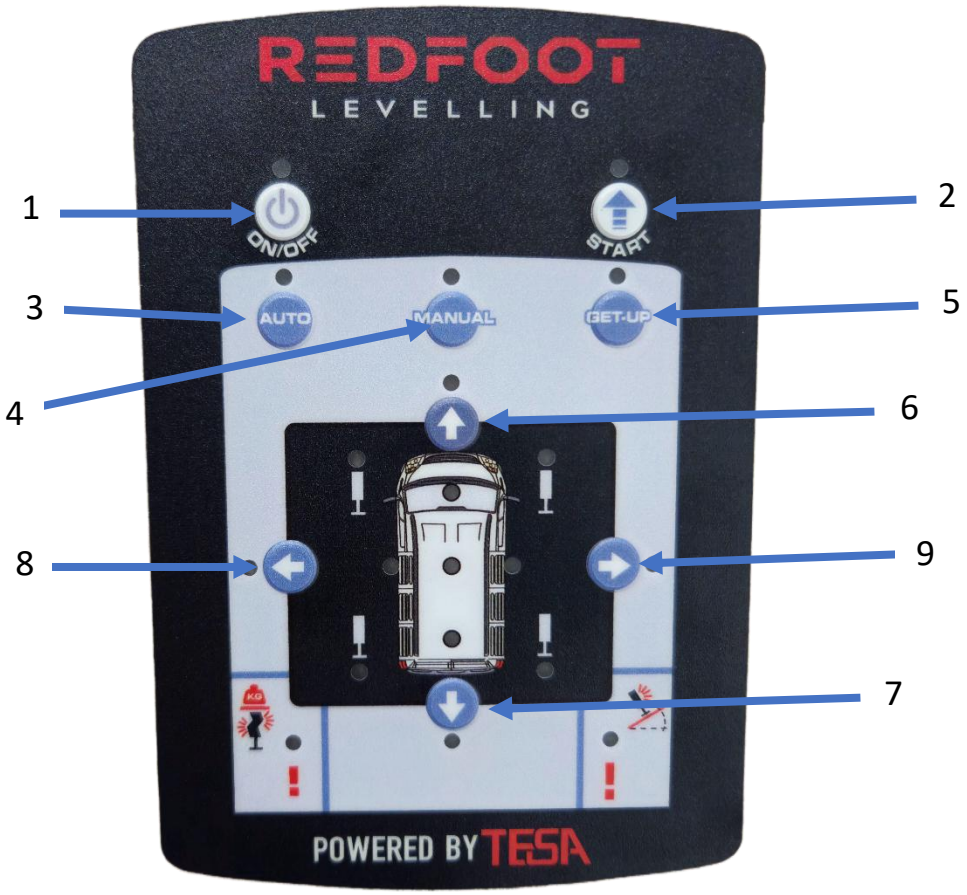

1. ON/OFF: System switch
2. START: begins the start phase*
3. AUTO: begins the automatic levelling*
4. MANUAL: activates manual levelling*
5. GET-UP: lifts all jacks to driving position*
6. Ascend front Jacks (manual) ↑
7. Ascend rear Jacks (manual) ↓
8. Ascend left Jacks (manual) ←
9. Ascend right Jacks (manual) →

LED layout

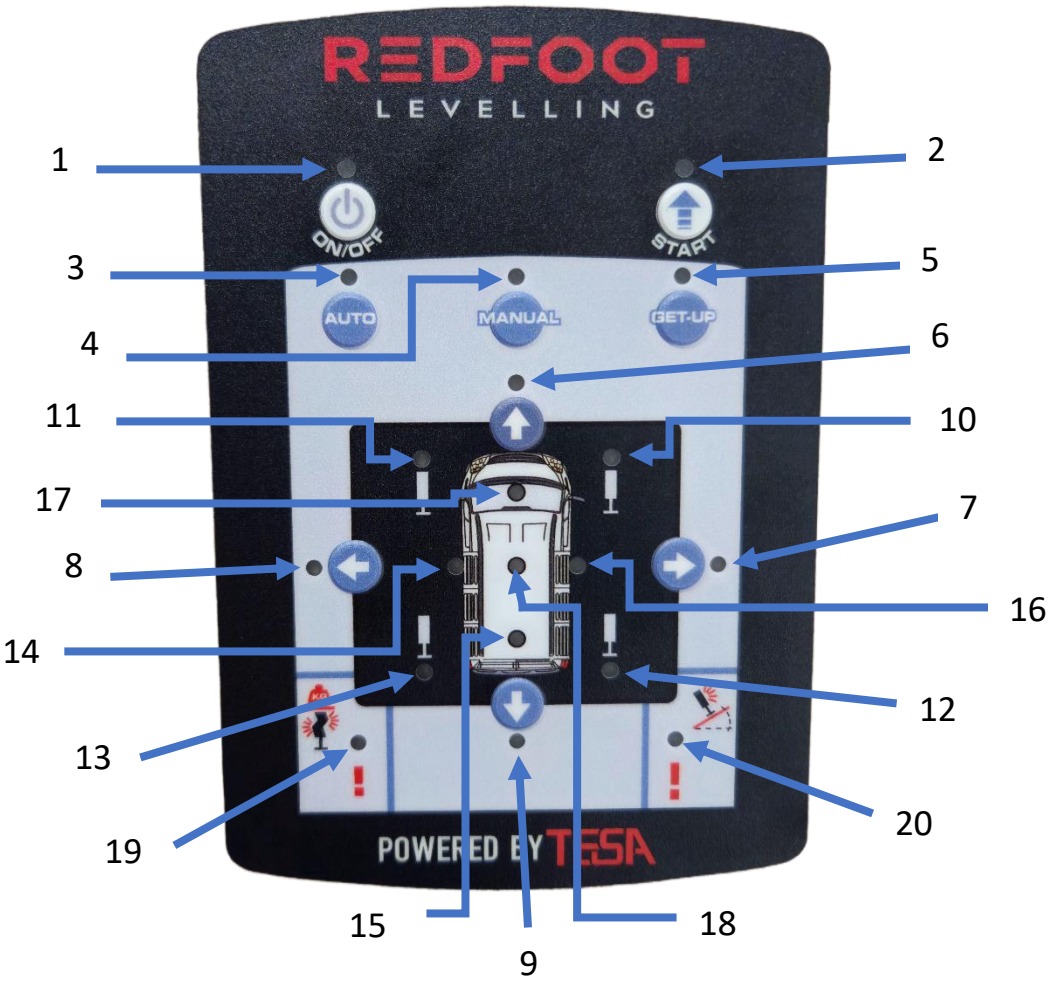

1. Red LED System on
2. Green LED ready for phase START
3. Red LED: ready for automatic levelling
4. Red LED: ready for manually levelling
5. Red LED ready for GET UP
6. yellow LED: button front jacks activated
7. yellow LED: button right jacks activated
8. yellow LED: button left jacks activated
9. yellow LED: button rear jacks activated

10. 11. 12. 13. Red LED's: overload or malfunction*

14. 15. 16. 17. Red LED's: level indicator shows the side which must be lifted

18. Green LED: levelling correct (as programmed)
19. Red LED: overload *
20. Red LED: unacceptable incline

Description of functions

ON/OFF (option 1)

Press the **ON/OFF** button to switch the system on. Shortly after, the system starts an auto test in which all LEDs light up one after the other. At the end of the test, when all the Jacks are in the Stowed “driving” position, the START LED lights up, indicating that the Jacks are ready to move out. If all columns are in the vertical position, the LED GET UP illuminates, indicating that only the function of retraction is available.

* If the control sequence of the LEDs has not started, check whether other LEDs indicate an error.

START (option 2)

Pressing the **START** button is the first step to initiate the levelling functions. The Jacks move into the vertical position and await the next command, this safety function is necessary so that the Jacks can be visually checked for obstructions. In this position, you have the possibility to lay the pads between the ground and Jack foot. At the end of the START phase, the **AUTO, MANUAL** and **GET UP** LEDs light up to indicate the availability of these functions.

* If the LED “AUTO” is not lit, automatic levelling in this position is not possible for safety reasons, indicated by the "Incorrect Incline" LED. Under these conditions, only manual levelling is available.

AUTO (option 3)
After the START phase, the automatic levelling can be started by pressing the AUTO key. The jacks will plant the ground, then the automatic levelling sequence will begin. Always pairs of jacks are moved to distribute the lifting forces on two jacks and to avoid torsion of the chassis. At the end of the levelling function, the green LED (18) lights up which indicates correct level has been achieved. During the AUTO function, only the get up function is available. If the LED (20) lights up, the correct levelling may not take place because the remaining stroke of the jacks is not sufficient. In this case, the system attempts to achieve the best possible level. Alternatively, when the LED 20 is lit, the manual function can also be used to provide more precise alignment.

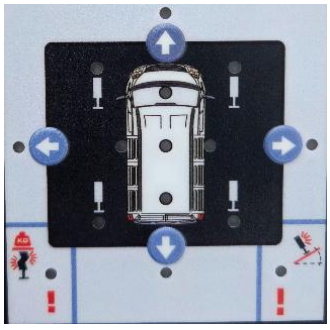

Manual (option 4)
Manual levelling can be performed after the start phase is complete. This function is also be used to lift a side of the vehicle for tire change, attaching snow chains or emptying tanks better. Pressing the manual button simultaneously lowers all the jacks to the ground, all four yellow LEDs (6-7-8-9) light up and enable the operation with the arrow keys. Each of the arrow buttons moves a pair of jacks.
The jacks are always operated in pairs to distribute the lifting forces on two jacks and to avoid torsion of the chassis. The vehicle can be manually levelled by observing the indicator LEDs (14-15-16-17) which indicate which side must be lifted to achieve level, the green LED in the middle (18) indicates correct level.
If the jacks cannot be extended further, an overload alarm LED is displayed (19). If at the end of a manual level one jack is still not on the ground press the manual button again and plant that jack, this significantly improves the stability without changing the level.

GET-UP (option 5)
Press the GET UP button to retract the jacks. The jacks move to the point where they are not touching the ground but in a vertical position. At this point the jacks stop to allow the user to remove pads from under the jacks. During this time, an intermittent beep will be heard, one you press get up a second time, the jacks fold upwards into their horizontal stow positions. Any under laying wood or pads must be removed before stowing the jacks to avoid damage to the supports. The complete retraction of all the jacks is acknowledged by a long beep and the start LED.

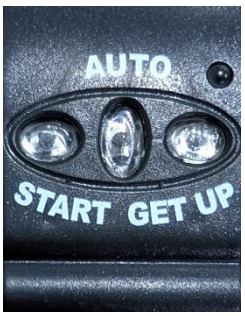

Remote Control
To operate the remote the panel must be switched on. The main functions can be operated outside with the remote, this is so you have eye contract with the jacks to make sure they are all deploying correctly, to control the floor conditions and set pads/spacers. The only functions available are START, AUTO and GET-UP, other functions must be operated via the control panel.

Overload Alarm
In case of overloading one or more of the jacks this LED (19) lights up alongside one or few of the jack LEDs (10-11-12-13) that are in an overloaded position.
Overload can be triggered by full extension to the mechanical end point of the jack(s) or by excess weight over the rated capacity. In this case only the get up function will be available.

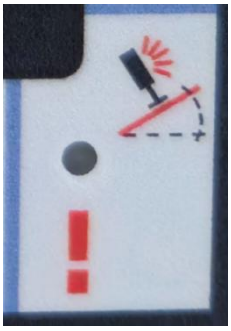

Unacceptable incline alarm
This LED is lit when the angle of inclination is greater than what the system can level without extra aids, such as pad and blocks. With auto level the system tries to achieve the best possible level, but correct level cannot be guaranteed. Alternatively, the jacks can be used in manual mode the achieve a level desired.

Blocking of functions with ignition

The jacks cannot be operated when the ignition is in the on position or when the engine is running. This safety function is necessary to prevent the jacks from being accidentally lowered while driving. Each time the ignition is switched on, the system will do a check to make sure jacks are stowed. If the legs are in the stow position there is no signal and the keypad is locked, if the legs are not fully stowed you will receive an acoustic and visual signal on the control panel, indicating that the jacks must be retracted before driving.
This safety function can be switched off if needed, e.g. to charge the battery. To switch off, press the start button on the control panel for approx. 5 seconds until the LED start lights up. From now on you have all the functions available until the vehicle in shut off again, after when the system will return to default mode. This operation cannot be initiated with the remote control. **Use this function with caution.**

Jack lights will flash if the system detects ignition and jacks are not in the stowed position.

Signalling of malfunctions

After pressing the ON button, the system will complete an auto test to check all the functions and signals are working correctly. All LEDs light up one after another along with a series of beeps. If something is wrong, the respective error indictor will light up on the control panel.
If LEDs 14,15,16,17 and 18 are synchronous, then correct levelling is not yet programmed and stored.

One of the jack lights flashing with intermittent beep indicates the corresponding jack has hit an obstacle while retracting into the stowed position. The jack will return to the vertical position so that the obstacle can be removed.

Flashing of a jack light and the manual light indicates a malfunction of the jacks limit switch. This error may prevent getup function being available. The emergency operation on page 27 will be needed to get the jacks back to the stowed position.

Troubleshooting

System cannot be switched on

Check the fuse in the positive line, check the connection between the panel and the control unit and try with another network cable.

LED START does not light up

One of the limit switches is not correctly adjusted. Check all switches and adjust them as shown on page 15.

The vehicle is not level after using AUTO function

It is possible the controller is incorrectly mounted under the van and or wiring to the jacks is incorrect causing the levelling to not be accurate.

Resetting the auto level parameters

The tolerance of auto level is around 0.3° in both directions. Use the procedure below if you are needing a better result from the auto level function.

1. Turn on the device and wait for the START LED to light up
2. Press START and wait for the MANUAL LED to light up
3. Press MANUAL to start the manual operation and wait for the LEDs 6-7-8-9 to turn on
4. Use the arrow keys 6-7-8-9 and a spirit level to correctly level the vehicle.
5. After levelling, turn off the device with the ON / OFF button
6. Turn on the device and immediately press and hold simultaneously the AUTO - MANUAL - GET-UP keys
7. Release the three keys until you hear 7 consecutive beeps and then release all keys.

Scan this QR Code to watch explanation video on how to set the level on the AutoLift system

Emergency operation

In the event of damage to one of the jacks, the fault will be indicated when the system is switched on and the GET UP function is not available.
To return the jacks to the slowed position, switch to the emergency operation mode as follows.

1. Turn on the device by briefly pressing the ON / OFF button
2. Immediately press and hold the four keys with the arrow (6-7-8-9) simultaneously, until the MANUAL LED flashes. Release the four keys.
3. Press the MANUAL button. The LED will stop flashing and will illuminate continuously.
4. Press the arrow keys (6-7-8-9) one at a time, to retract the relevant jacks to the driving position leaving the damaged jack for last.

Scan this QR Code to watch explanation video on how to activate emergency override mode on AutoLift system

If the steps above do not work due to mechanical damage, move onto manually retracting the jack.

1. Using a 13mm wrench turn the nut located at the top on the jack clockwise, this will retract the jack.
2. Doing this should cause the jack to rotate into the horizontal position.

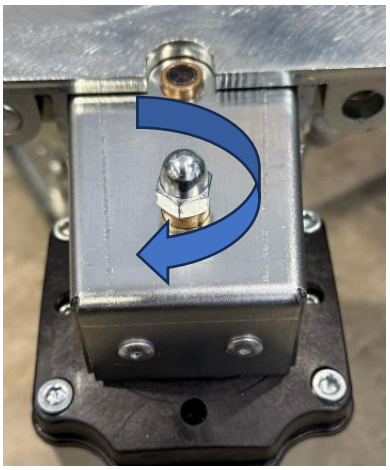

In the event of a mechanical breakdown where the jacks do not retract at all, return the jacks to the driving position as follows:

1. Use the vehicle's car jack to lift the vehicle so that the jack is hovering off the ground
2. Using your hands, push the jack into the driving position
3. Secure the jack to the chassis with an elastic cord or spring so that it remains locked in the driving position
4. Contact an installer for repair.

Technical data

Lifting power dynamic	Kg 2000 each jack, electronically controlled
Lifting power static	Kg 5000 each jack
Total extension	mm 180
Effective extension	mm 150
Speed max.	5 mm /sec.
Consumption at 1000kg lifting force	12 A
Maximum levelling Longitudinal axle (X)	≥4° (8 %)
Maximum levelling diagonal axle (Y)	≥6° (12 %)
Time automatic levelling	Max 60 sec.
Vertical dimension can be changed to:	changeable 300 mm - 320mm - 340 mm – 380 mm - 420 mm
Consumption switched off	0 A
Weight jack	~ Kg 11
Weight total	~ Kg 50
Conformity	89/336/CE
Range of temperature	-20 ÷ 50 °C
Precision automatic levelling	<0,3°

REDFOOT LEVELLING

Redfoot Maintenance Schedule

Autolift System

White Box = To Be Completed

Months	Clean & Regrease Main Slides	Check Bolt & Nut Torque	Check Jack Connections	Check Control Box & Mounting	Clean & Regrease Gear Drive	Check Brackets for Damage	Check Controller Saftey Functions	Date Performed	Note
6									
12									
24									
36									
48									
60									
72									
84									
96									
108									
120									

Unit 1, 7 Abeles Street Baringa QLD 4551
Ph. +61 7 5228 0211
www.redfootlevelling.com.au

Product Warranty Guide

Redfoot Levelling Pty Ltd

1. Only warranty claims with prior written or verbal authorisation from Redfoot Levelling will be recognised, all other claims will be denied.
2. Redfoot Levelling warrants AutoLift levelling system components for a period of **two years** from the date of original sale of the vehicle. This warranty covers defects in material and workmanship only. Redfoot Levelling is not liable for any damage due to abuse, neglect, misuse, negligence, misapplication, error of operation, accidental or purposeful damage or damage due to an “Act of God” such as, wind or rain damage, flood, lightning or other natural causes of the like. Redfoot Levelling’s limited warranty is applicable to the Redfoot Levelling components only and does not apply to the vehicle, apparatus, or property to which it is attached. Warranty parts will be shipped at no charge if the repair is authorised by a Redfoot Levelling representative. Purchased components used in authorised warranty repairs will be reimbursed at the original purchase price. All returns must be preauthorised by a Redfoot Levelling representative. Connotes will be supplied for their return unless prior arrangements have been made. Installers must receive and accept the appropriate scope of works from Redfoot Levelling prior to the commencement of any work.
3. Labour and freight expenses due to warrantable parts defects or workmanship will be reimbursed for the period of **two years** from the date of the original sale of the vehicle. Freight expenses will either be prepaid by Redfoot Levelling or reimbursed at the road logistic rate only. Any additional shipping charges or requirements are the obligation of the vehicle owner or service centre performing the warranty repair. The owner or service centre’s obligation may include overseas shipping charges, border fees, and any other additional fees of the like.
4. Prior authorisation is required before parts may be returned to Redfoot Levelling. Redfoot Levelling will supply a connote for the return goods.
5. Labour, parts, and freight credit (if applicable) will be sent after the parts are tested and the warranty claim is validated. Returned parts that are found to be in normal operating condition are not warrantable and will be charged to the owner or service centre. Redfoot Levelling reserves the right to charge back the service centre for labour claim payments previously submitted if the installation of the warranted part is found to be inadequate later.
6. Warranty labour will be reimbursed only for claims that have prior written or verbal authorisation from a Redfoot Levelling representative. Time associated with learning about the repair or excessive diagnostic and installation time will not be reimbursed. Warranty labour will be reimbursed at the authorised service centre’s published shop rate for that region. Overtime labour will not be reimbursed without exception.
7. Replacement parts are warranted under the same guidelines listed in this guideline for the remainder of the original warranty or 90 days, whichever is longer. Proof of warranty repair date and original vehicle purchase date are required. No additional warranties expressed or implied are authorised by Redfoot Levelling.
8. All warranty works are to be completed and invoiced within 3-months of the Scope of Works date of issue.

9. Parts that are required to be returned to Redfoot Levelling, must be returned upon job completion and prior to warranty invoicing. Parts not returned within this period will be billed to the installer. Claims will be denied if the date submitted is greater than **30 days** from the repair.
10. Complete systems are not warranted unless authorised by a Redfoot Levelling representative. There are absolutely no exceptions to this clause.
11. Consideration should be taken regarding the location and protection of Redfoot Levelling's components prior to installation. Please reference our installation manuals for recommended locations and maintenance or visit www.redfootlevelling.com.au for more information. The failure of any Redfoot Levelling components due to extreme environmental conditions, improper installation or lack of maintenance will not be covered under the warranty.
12. Warranty coverage for parts or systems sold by non-authorised resellers will be at the discretion of Redfoot Levelling.
13. This warranty begins upon the sale date of the vehicle and is transferable, with limitation, subsequent owners are to provide the original sale date of the vehicle and proof of purchase.
14. Redfoot Levelling is not liable for loss of time, manufacturing costs, labour, material, loss of profits, direct or indirect damages incurred by the vehicle manufacturer.
15. Excessive warranty labour resulting from inadequate access to the Redfoot Levelling product will not be reimbursed.
16. Redfoot Levelling will not pay mark-up on warranty parts unless required by law.
17. Travel expenses, hotel, telephone, fuel, or any other expense of the like are not covered under the warranty.

No additional warranties expressed or implied are authorised by Redfoot Levelling.

Redfoot Levelling Pty Ltd
Unit 1, 7 Abeles Street
BARINGA QLD 4551
Ph. +61 7 5228 0211
E.info@redfootlevelling.com.au

REDFOOT
LEVELLING